© Dream Technology System 2018

DTS Group Training Centres Location:

Singapore 2, Kallang Avenue #08-18 CT Hub, Singapore 339407
Johor Bahru Unit 07-04, Austin18, Jalan Austin Perdana 3, Taman Austin Perdana, 81100 Johor Bahru, Johor
Penang 1A-2-02 @ One Precinct (1337) Lengkok Mayang Pasir, 11900 Bayan Baru, Penang.
Kuala Lumpur 221, Block A, Kelana Center Point, Jalan SS7/19, 47301 Petaling Jaya, Selangor
info@dtsys.sg / info@dtsys.ny

Contents

Course Overview **1**
Intended Audience 1
Pre-requisites 1
Course Objectives 1
Common symbols 2
ZW3D Help Library 2
Lesson 1: Introduction to ZW3D interface **3**
Introduction to ZW3D 4
Create a new file using a template 5
File Management 6
User Interface 7
ZW3D window 8
Customisation of UI/ Hotkeys/ Mouse Operations 10
Configuration and Settings 14
Data Exchange 16
Lesson 2: Inquiring 3D Part Information **19**
Materials Library 20
Mass Properties 22
Change Work Coordinate System (WCS) 23
Check Stock 25
Check Distance 26
Radius Analysis 28
Check Radius 30
Draft Analysis 31
Check Draft 33
Create Draft 34
Check Thickness 36
Section View 37
Lesson 3: Sketching and Modelling **46**

© Dream Technology System 2018

DTS Group Training Centres Location:

Singapore 2, Kallang Avenue #08-18 CT Hub, Singapore 339407
Johor Bahru Unit 07-04, Austin18, Jalan Austin Perdana 3, Taman Austin Perdana, 81100 Johor Bahru, Johor
Penang 1A-2-02 @ One Precinct (1337) Lengkok Mayang Pasir, 11900 Bayan Baru, Penang.
Kuala Lumpur 221, Block A, Kelana Center Point, Jalan SS7/19, 47301 Petaling Jaya, Selangor
info@dtsys.sg / info@dtsys.ny

Creating Sketch 47
Modelling 57
Lesson 4: Direct Editing **63**
Simplify Feature 64
DE Mirror 67
DE Move 69
DE Pattern 72
Lesson 5: Creating a 2D Drawing **75**
Toggling to 2D Environment 76
Creating Layout View 78
Create a Base View 86
Creating Projection View 88
Add Assigned View 90
Create ISO View 93
Create Section View 97
Create Detail View 101
Dimensions in 2D Drawings 112
Bill of Materials (BOM Table) 113
Adding Annotations 4
Lesson 6: Healing Open Edges **5**
Healing Surfaces 6
Analyse Broken Surfaces 8
Fill Gap 11
Remove Extra Surfaces 14
Sewing Surfaces 16
Extend Surfaces 18
Remove Trim Surfaces 20
Remove Solid 26
Training Resources **32**
Practice Project **33**

© Dream Technology System 2018
DTS Group Training Centres Location:
Singapore 2, Kallang Avenue #08-18 CT Hub, Singapore 339407
Johor Bahru Unit 07-04, Austin18, Jalan Austin Perdana 3, Taman Austin Perdana, 81100 Johor Bahru, Johor
Penang 1A-2-02 @ One Precinct (1337) Lengkok Mayang Pasir, 11900 Bayan Baru, Penang.
Kuala Lumpur 221, Block A, Kelana Center Point, Jalan SS7/19, 47301 Petaling Jaya, Selangor
info@dtsys.sg / info@dtsys.ny

Course Overview

Intended Audience

This course is suited for designers, manufacturing engineers, application programmers, CAD managers, and system managers who need to manage and use ZW3D.

Pre-requisites

There are no pre-requisites for this class.

Course Objectives

After successfully completing this course, you should be able to:

- Open and examine CAD models.
- Create and edit parametric solid models.
- Create and modify 2D drawings.

© Dream Technology System 2018
DTS Group Training Centres Location:
Singapore 2, Kallang Avenue #08-18 CT Hub, Singapore 339407
Johor Bahru Unit 07-04, Austin18, Jalan Austin Perdana 3, Taman Austin Perdana, 81100 Johor Bahru, Johor
Penang 1A-2-02 @ One Precinct (1337) Lengkok Mayang Pasir, 11900 Bayan Baru, Penang.
Kuala Lumpur 221, Block A, Kelana Center Point, Jalan SS7/19, 47301 Petaling Jaya, Selangor
info@dtsys.sg / info@dtsys.ny

Common symbols

This manual uses special symbols as shown below.

Note – Contains useful information that supplements or emphasizes the main points.

Example – Shows a possible way that the current topic of discussion could be used.

Hint – Gives you insights on solving the Examples**.**

ZW3D Help Library

The ZW3D Help Library is available online any time you need more information about a function.

To access help for specific commands, on the ZW3D Ribbon bar choose **Help** **,** or press the F1 key while using a command to access the ZW3D Help Library for that command.

To access the ZW3D Help Library, on the ZW3D Ribbon Bar choose **Help → Online Knowledge Base.**

© Dream Technology System 2018
DTS Group Training Centres Location:
Singapore 2, Kallang Avenue #08-18 CT Hub, Singapore 339407
Johor Bahru Unit 07-04, Austin18, Jalan Austin Perdana 3, Taman Austin Perdana, 81100 Johor Bahru, Johor
Penang 1A-2-02 @ One Precinct (1337) Lengkok Mayang Pasir, 11900 Bayan Baru, Penang.
Kuala Lumpur 221, Block A, Kelana Center Point, Jalan SS7/19, 47301 Petaling Jaya, Selangor
info@dtsys.sg / info@dtsys.ny

Lesson 1: Introduction to ZW3D interface

Purposes

This lesson introduces the ZW3D user interface.

Objectives

Upon completion of the lesson, you will be able to:

- Start a ZW3D session
- Manage files
- Customization
- Configure settings
- Data Exchange

© Dream Technology System 2018
DTS Group Training Centres Location:
Singapore 2, Kallang Avenue #08-18 CT Hub, Singapore 339407
Johor Bahru Unit 07-04, Austin18, Jalan Austin Perdana 3, Taman Austin Perdana, 81100 Johor Bahru, Johor
Penang 1A-2-02 @ One Precinct (1337) Lengkok Mayang Pasir, 11900 Bayan Baru, Penang.
Kuala Lumpur 221, Block A, Kelana Center Point, Jalan SS7/19, 47301 Petaling Jaya, Selangor
info@dtsys.sg / info@dtsys.ny

Introduction to ZW3D

The first step in working in ZW3D is to log on to a workstation and start a ZW3D session.

After you start ZW3D, you will see the following interface. You can quick browser file or review file at left side or you can change defaults and preferences, open an existing part file or create a new part file.

Figure 1:ZW3D Interface

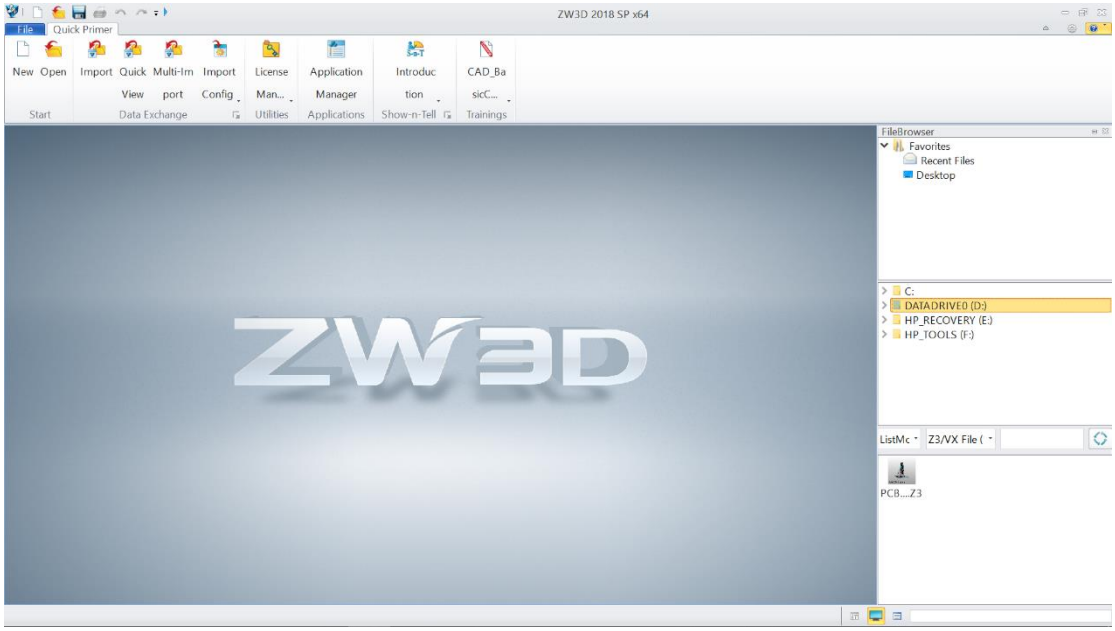

© Dream Technology System 2018
DTS Group Training Centres Location:
Singapore 2, Kallang Avenue #08-18 CT Hub, Singapore 339407
Johor Bahru Unit 07-04, Austin18, Jalan Austin Perdana 3, Taman Austin Perdana, 81100 Johor Bahru, Johor
Penang 1A-2-02 @ One Precinct (1337) Lengkok Mayang Pasir, 11900 Bayan Baru, Penang.
Kuala Lumpur 221, Block A, Kelana Center Point, Jalan SS7/19, 47301 Petaling Jaya, Selangor
info@dtsys.sg / info@dtsys.ny

Create a new file using a template

1. Click on **New** icon on the top left-hand corner.

   Alternatively, use **Ctrl+N** to create a New part.

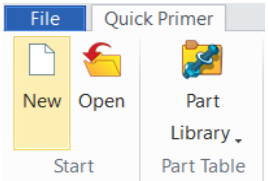

Figure 2: New icon

2. Select the **file type** you want. (1)
3. Type in the **information**. (2)

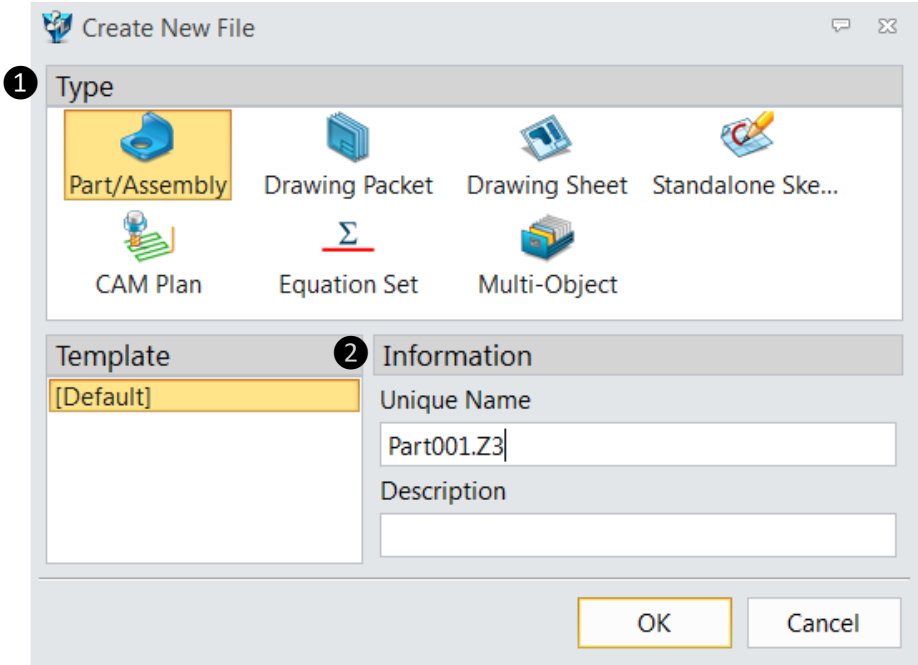

Figure 3: Create New File

© Dream Technology System 2018
DTS Group Training Centres Location:
Singapore 2, Kallang Avenue #08-18 CT Hub, Singapore 339407
Johor Bahru Unit 07-04, Austin18, Jalan Austin Perdana 3, Taman Austin Perdana, 81100 Johor Bahru, Johor
Penang 1A-2-02 @ One Precinct (1337) Lengkok Mayang Pasir, 11900 Bayan Baru, Penang.
Kuala Lumpur 221, Block A, Kelana Center Point, Jalan SS7/19, 47301 Petaling Jaya, Selangor
info@dtsys.sg / info@dtsys.ny

File Management

- ZW3D can manage a **Single-object** file.
- ZW3D can also manage **Multi-objects** file (as default), as shown below. One file can hold many parts, assemblies, drawing sheets and CAM plans as you desire.

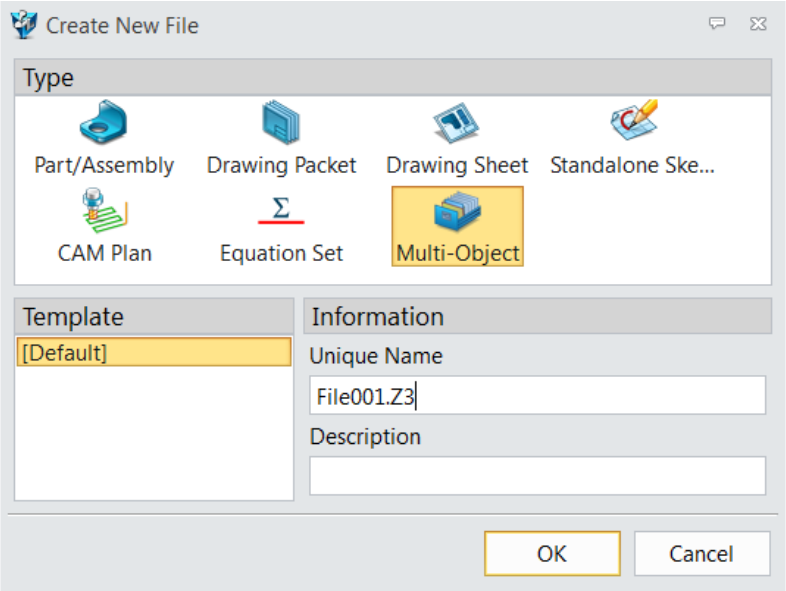

Figure 4: Multi-Object

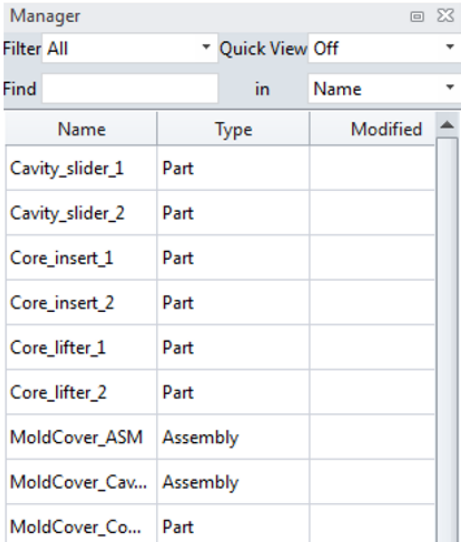

Figure 5: Multi-object 2

© Dream Technology System 2018
DTS Group Training Centres Location:
Singapore 2, Kallang Avenue #08-18 CT Hub, Singapore 339407
Johor Bahru Unit 07-04, Austin18, Jalan Austin Perdana 3, Taman Austin Perdana, 81100 Johor Bahru, Johor
Penang 1A-2-02 @ One Precinct (1337) Lengkok Mayang Pasir, 11900 Bayan Baru, Penang.
Kuala Lumpur 221, Block A, Kelana Center Point, Jalan SS7/19, 47301 Petaling Jaya, Selangor
info@dtsys.sg / info@dtsys.ny

User Interface

The ZW3D Ribbon bar interface provides access to frequently used commands with a minimum number of mouse clicks while maintaining a maximum graphics window area.

1. The tabs on the Ribbon bar are logically organized, using a mix of icon sizes and informative text.
2. You can customise the interface to suit your workflows, for example, by undocking tabs or by adding frequently used commands to the border bars.
3. Hover your mouse to the empty icon area and **Right-click** the mouse.

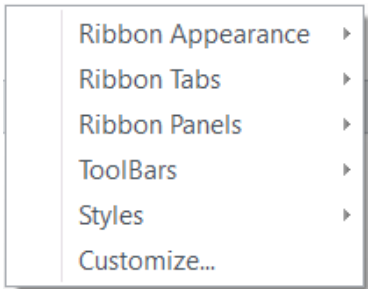

Figure 6: Ribbon Tool

4. Toggle the options in **Ribbon Appearance, Ribbon Tabs, Ribbon Panels, ToolBars,** and **Styles** to suit your preference.

© Dream Technology System 2018
DTS Group Training Centres Location:
Singapore 2, Kallang Avenue #08-18 CT Hub, Singapore 339407
Johor Bahru Unit 07-04, Austin18, Jalan Austin Perdana 3, Taman Austin Perdana, 81100 Johor Bahru, Johor
Penang 1A-2-02 @ One Precinct (1337) Lengkok Mayang Pasir, 11900 Bayan Baru, Penang.
Kuala Lumpur 221, Block A, Kelana Center Point, Jalan SS7/19, 47301 Petaling Jaya, Selangor
info@dtsys.sg / info@dtsys.ny

ZW3D window

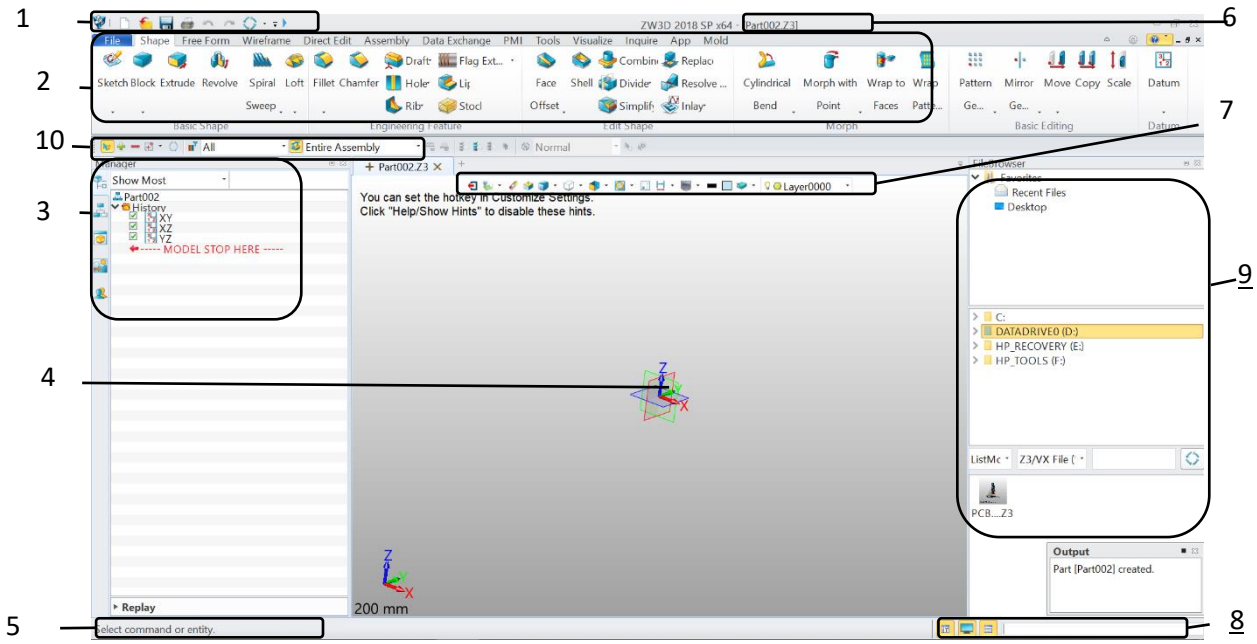

Figure 7: ZW3D Window

© Dream Technology System 2018
DTS Group Training Centres Location:
Singapore 2, Kallang Avenue #08-18 CT Hub, Singapore 339407
Johor Bahru Unit 07-04, Austin18, Jalan Austin Perdana 3, Taman Austin Perdana, 81100 Johor Bahru, Johor
Penang 1A-2-02 @ One Precinct (1337) Lengkok Mayang Pasir, 11900 Bayan Baru, Penang.
Kuala Lumpur 221, Block A, Kelana Center Point, Jalan SS7/19, 47301 Petaling Jaya, Selangor
info@dtsys.sg / info@dtsys.ny

#	Component	Description
1	Quick Access Toolbar	Contains commonly used commands such as Save and Undo.
2	Ribbon Tab	Organizes commands in each application into tabs and groups.
3	Managers	Navigates around History, Assembly, View and Visual Manager.
4	Workspace	Lets you model, visualize and analyse models.
5	Prompt Line	Prompts you for your next action, and displays messages.
6	Title Bar	Name of part file
7	Document Awareness Toolbar	Contains the display options and allow you to toggle between 3D model and 2D drawings
8	Input Window	Displays the commands you add.
9	File Browser & Review	Can review file and quick browser file.
10	Filter list	Can filter the selection

*The selection in Filter list

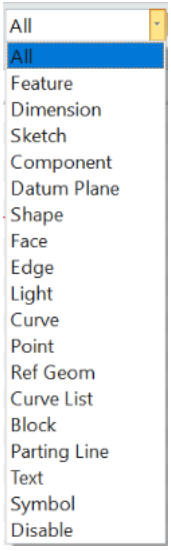

© Dream Technology System 2018
DTS Group Training Centres Location:
Singapore 2, Kallang Avenue #08-18 CT Hub, Singapore 339407
Johor Bahru Unit 07-04, Austin18, Jalan Austin Perdana 3, Taman Austin Perdana, 81100 Johor Bahru, Johor
Penang 1A-2-02 @ One Precinct (1337) Lengkok Mayang Pasir, 11900 Bayan Baru, Penang.
Kuala Lumpur 221, Block A, Kelana Center Point, Jalan SS7/19, 47301 Petaling Jaya, Selangor
info@dtsys.sg / info@dtsys.ny

Customisation of UI/ Hotkeys/ Mouse Operations

1. Hover your mouse to the empty icon area and **Right-click** the mouse.
2. Select **Customize.**

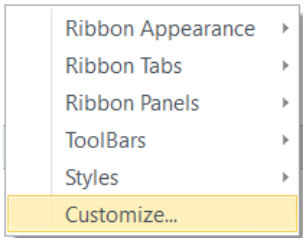

Figure 8: Ribbon Tool

3. The **Transfer, Hotkey** and **Mouse** tab can be seen.

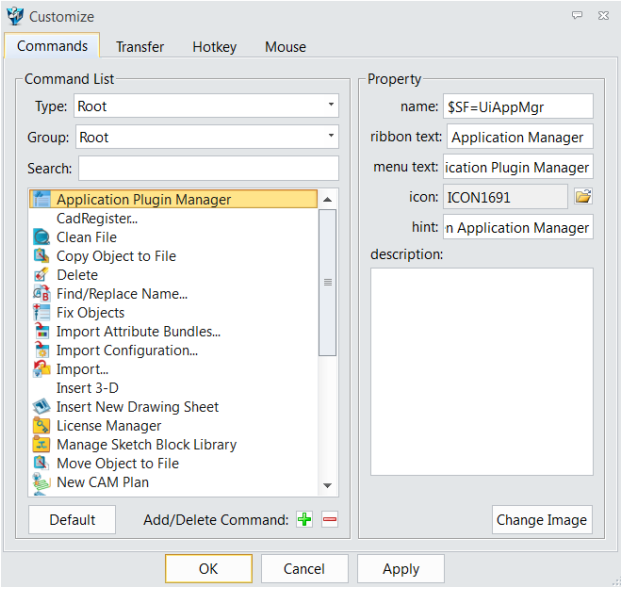

Figure 9: Customization

© Dream Technology System 2018
DTS Group Training Centres Location:
Singapore 2, Kallang Avenue #08-18 CT Hub, Singapore 339407
Johor Bahru Unit 07-04, Austin18, Jalan Austin Perdana 3, Taman Austin Perdana, 81100 Johor Bahru, Johor
Penang 1A-2-02 @ One Precinct (1337) Lengkok Mayang Pasir, 11900 Bayan Baru, Penang.
Kuala Lumpur 221, Block A, Kelana Center Point, Jalan SS7/19, 47301 Petaling Jaya, Selangor
info@dtsys.sg / info@dtsys.ny

4. Go to the **Transfer Tab**, select the command option from the left side panel and **drag** it to the right-side panel to add-on to the ToolBars.

   Insert Datum feature will now be under the **Shape** Tab.

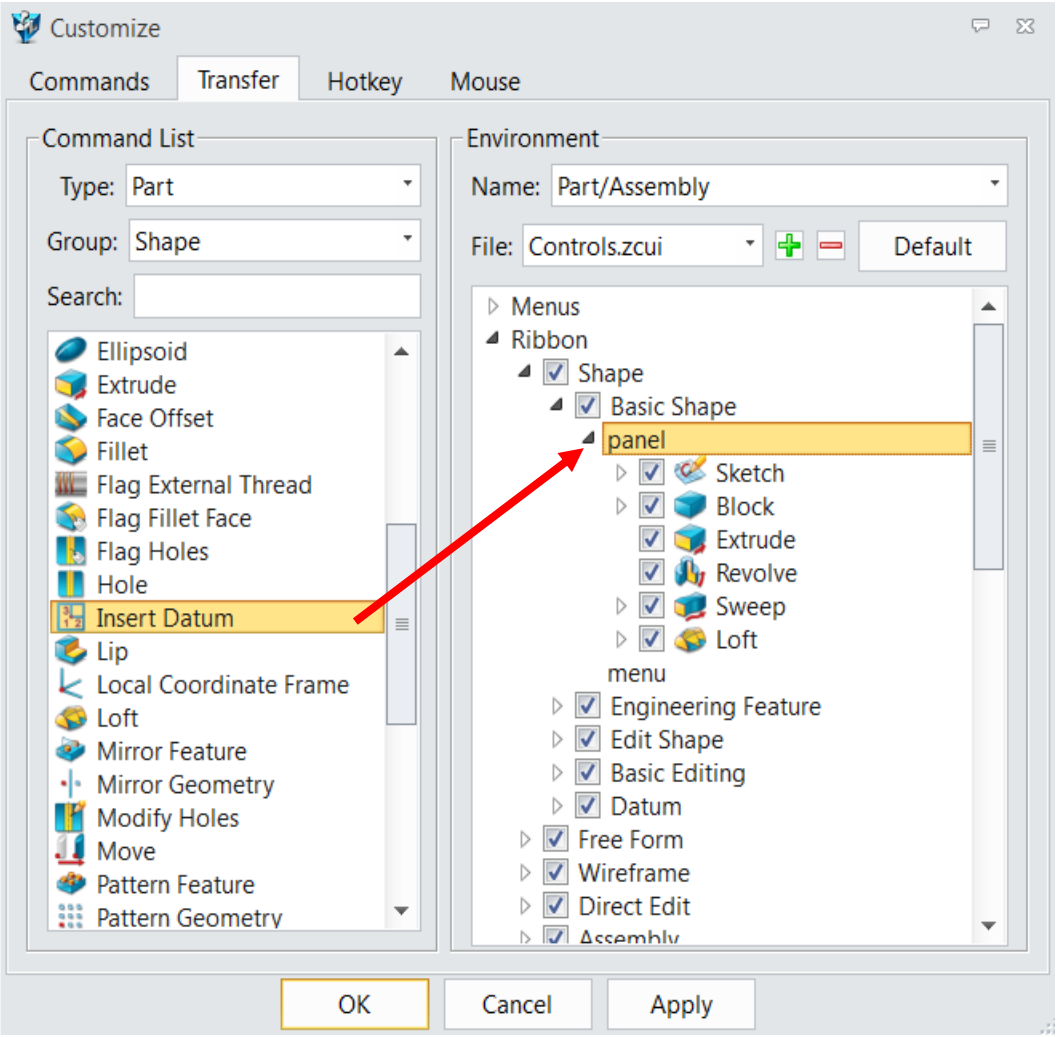

Figure 10: Customisation

Note:

Type in the **Search box** to find your command easily.

© Dream Technology System 2018
DTS Group Training Centres Location:
Singapore 2, Kallang Avenue #08-18 CT Hub, Singapore 339407
Johor Bahru Unit 07-04, Austin18, Jalan Austin Perdana 3, Taman Austin Perdana, 81100 Johor Bahru, Johor
Penang 1A-2-02 @ One Precinct (1337) Lengkok Mayang Pasir, 11900 Bayan Baru, Penang.
Kuala Lumpur 221, Block A, Kelana Center Point, Jalan SS7/19, 47301 Petaling Jaya, Selangor
info@dtsys.sg / info@dtsys.ny

5. Go to the **Hotkey tab** as shown below to customize the hotkeys.

   Enter your own Hotkey to customize.

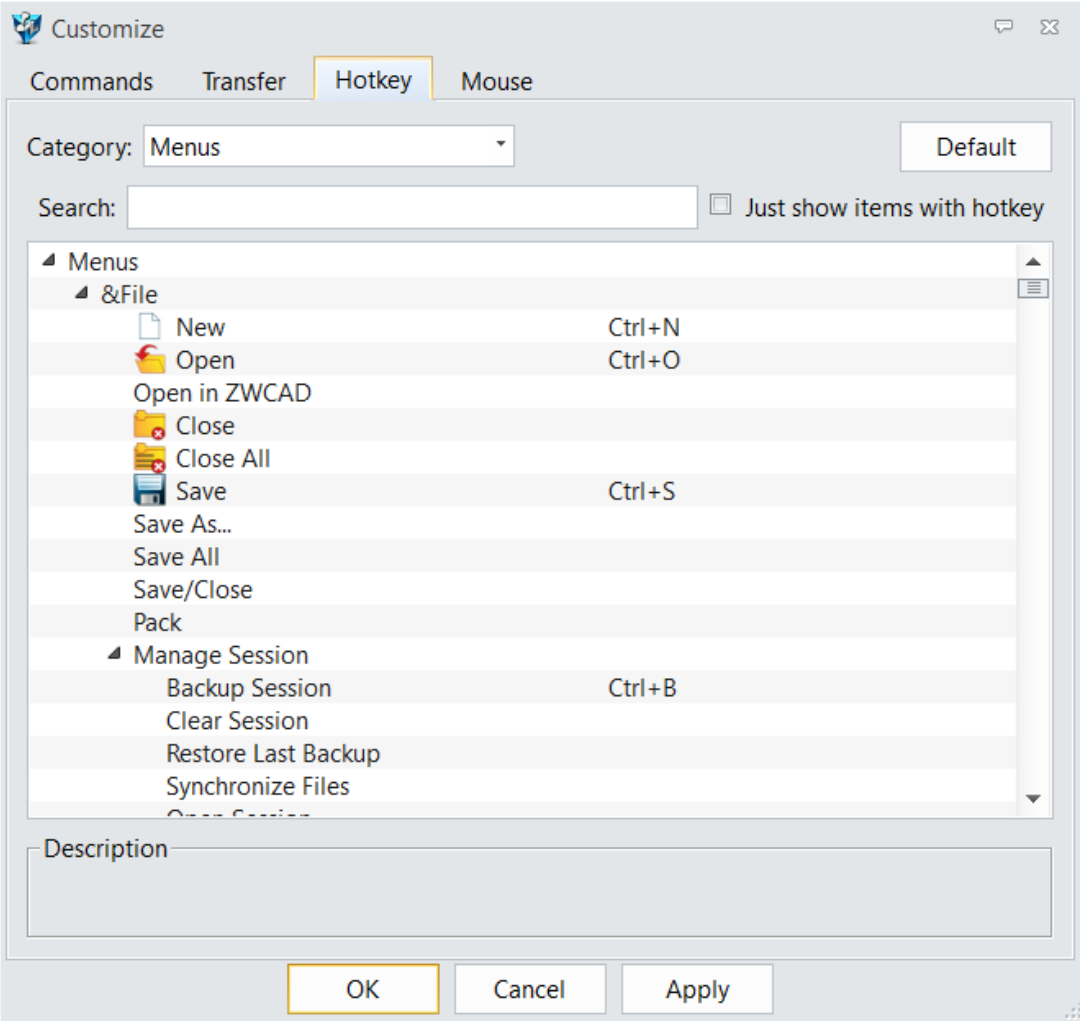

Figure 11: Hotkey Tab

Note:

Type in the **Search box** to find your command easily.

© Dream Technology System 2018
DTS Group Training Centres Location:
Singapore 2, Kallang Avenue #08-18 CT Hub, Singapore 339407
Johor Bahru Unit 07-04, Austin18, Jalan Austin Perdana 3, Taman Austin Perdana, 81100 Johor Bahru, Johor
Penang 1A-2-02 @ One Precinct (1337) Lengkok Mayang Pasir, 11900 Bayan Baru, Penang.
Kuala Lumpur 221, Block A, Kelana Center Point, Jalan SS7/19, 47301 Petaling Jaya, Selangor
info@dtsys.sg / info@dtsys.ny

6. Go to the **Mouse Tab** as shown below to customize the mouse operations.

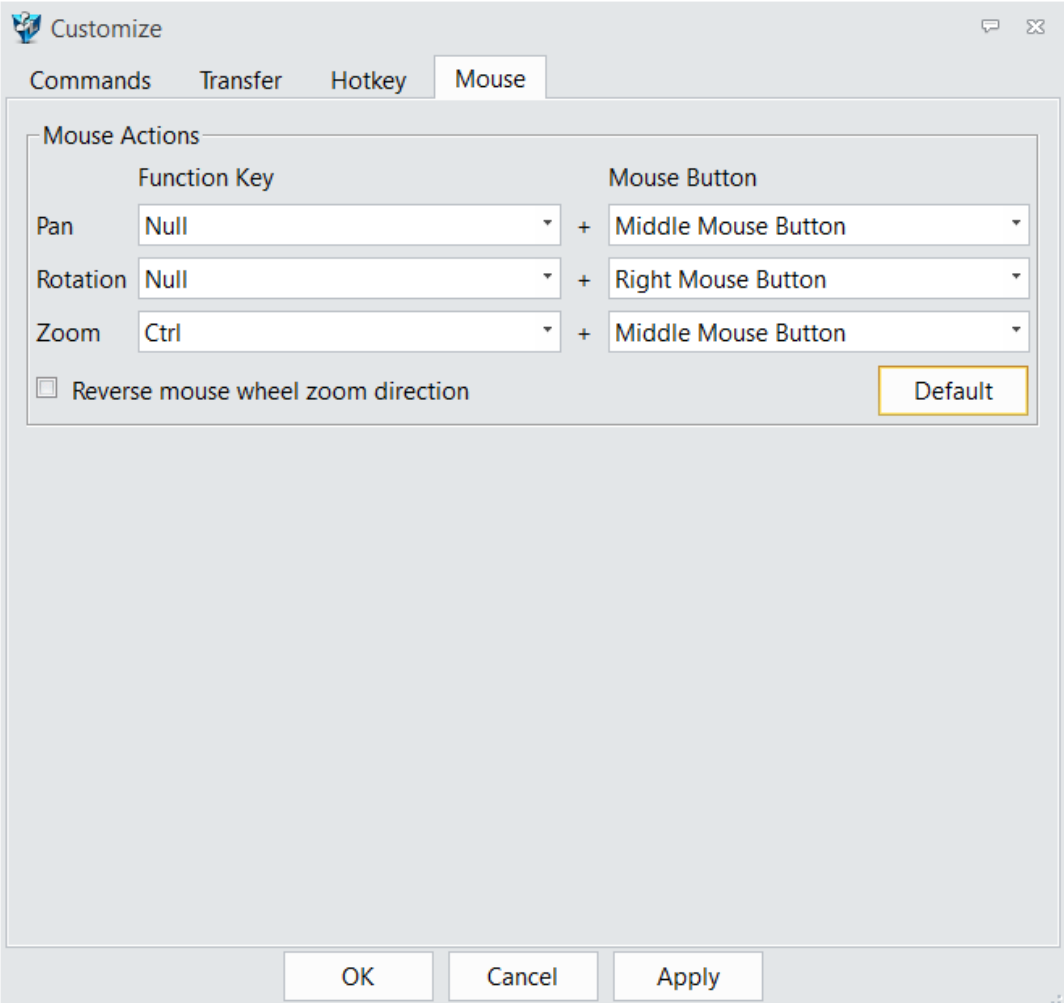

Figure 12: Mouse Tab

Note:

Clicking on the **Middle Mouse Button** will Repeat your last operation

© Dream Technology System 2018
DTS Group Training Centres Location:
Singapore 2, Kallang Avenue #08-18 CT Hub, Singapore 339407
Johor Bahru Unit 07-04, Austin18, Jalan Austin Perdana 3, Taman Austin Perdana, 81100 Johor Bahru, Johor
Penang 1A-2-02 @ One Precinct (1337) Lengkok Mayang Pasir, 11900 Bayan Baru, Penang.
Kuala Lumpur 221, Block A, Kelana Center Point, Jalan SS7/19, 47301 Petaling Jaya, Selangor
info@dtsys.sg / info@dtsys.ny

Configuration and Settings

1. Click on the settings (gear-shape) icon on the top right-hand corner.

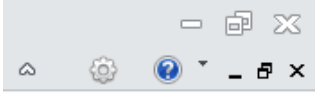

Figure 13: Settings icon

2. Configuration dialogue will be displayed. Colour, Background and File settings can be modified here.

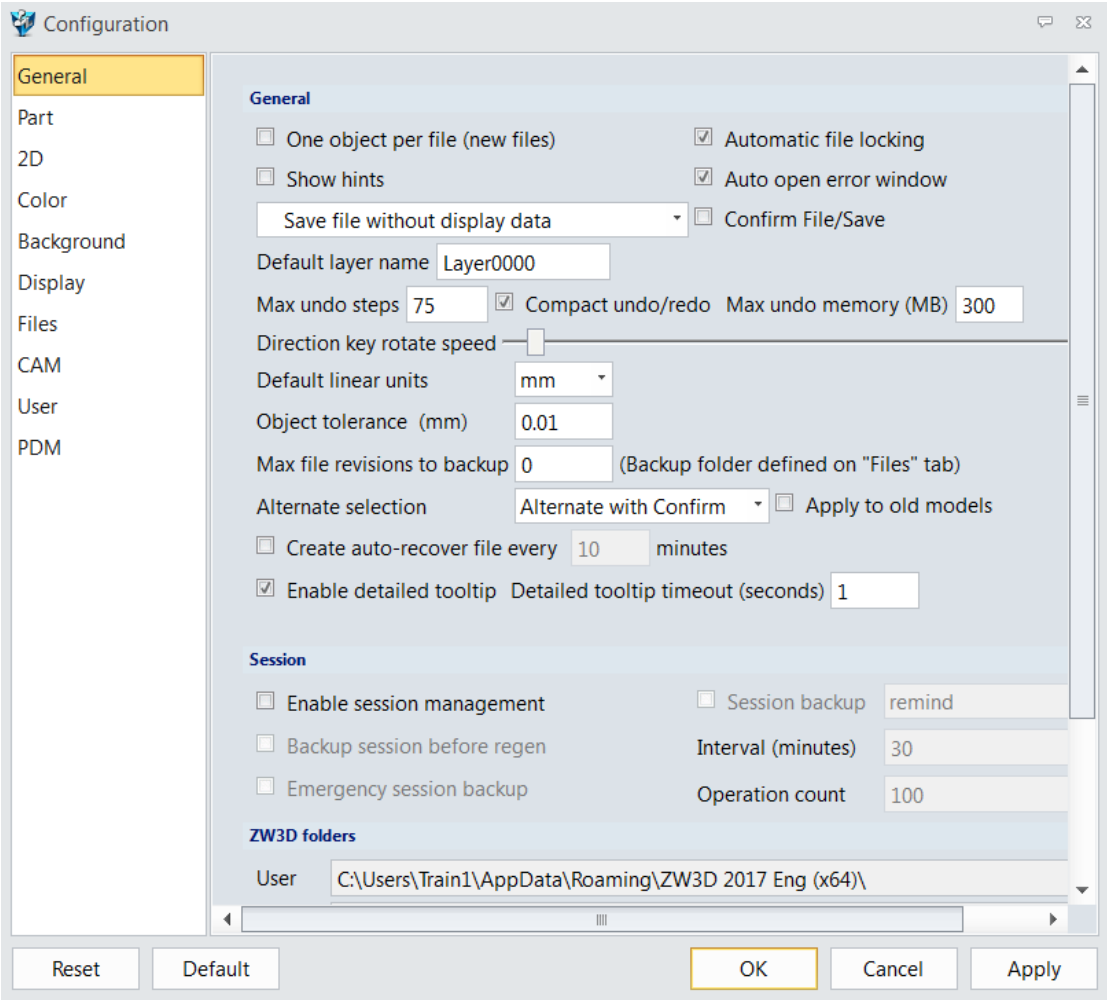

Figure 14: Configuration

© Dream Technology System 2018
DTS Group Training Centres Location:
Singapore 2, Kallang Avenue #08-18 CT Hub, Singapore 339407
Johor Bahru Unit 07-04, Austin18, Jalan Austin Perdana 3, Taman Austin Perdana, 81100 Johor Bahru, Johor
Penang 1A-2-02 @ One Precinct (1337) Lengkok Mayang Pasir, 11900 Bayan Baru, Penang.
Kuala Lumpur 221, Block A, Kelana Center Point, Jalan SS7/19, 47301 Petaling Jaya, Selangor
info@dtsys.sg / info@dtsys.ny

Other settings such as Units for Sketch/Part/2D Drawing/CAM Setting can be found under **Ribbon Tab → Tools → Preferences.**

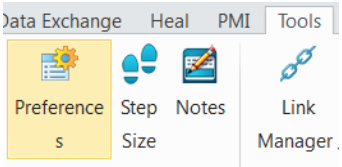

Figure 15: Preference icon

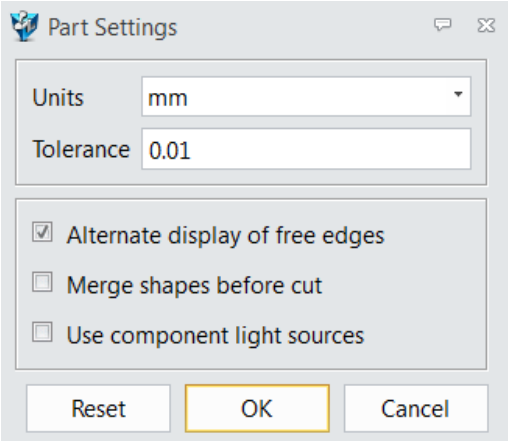

Figure 16: Part Settings

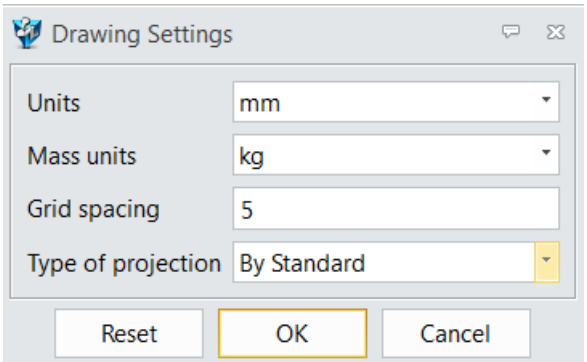

Figure 17: Drawing Settings

© Dream Technology System 2018
DTS Group Training Centres Location:
Singapore 2, Kallang Avenue #08-18 CT Hub, Singapore 339407
Johor Bahru Unit 07-04, Austin18, Jalan Austin Perdana 3, Taman Austin Perdana, 81100 Johor Bahru, Johor
Penang 1A-2-02 @ One Precinct (1337) Lengkok Mayang Pasir, 11900 Bayan Baru, Penang.
Kuala Lumpur 221, Block A, Kelana Center Point, Jalan SS7/19, 47301 Petaling Jaya, Selangor
info@dtsys.sg / info@dtsys.ny

Data Exchange

- ZW3D allows you to directly read 3D Model files from CATIA, UG NX, CREO, SOLIDWORKS, SOLIDEDGE and INVENTOR.
- ZW3D supports many different standard formats; including DXF, DWG, STEP, STL, IGES, PARASOLID, and ACIS(SAT).
- Z3 models can be directly export to Catia V4/V5 files.
- ZW3D is capable of exporting parts into 2D or 3D PDF format file to vividly view the models.

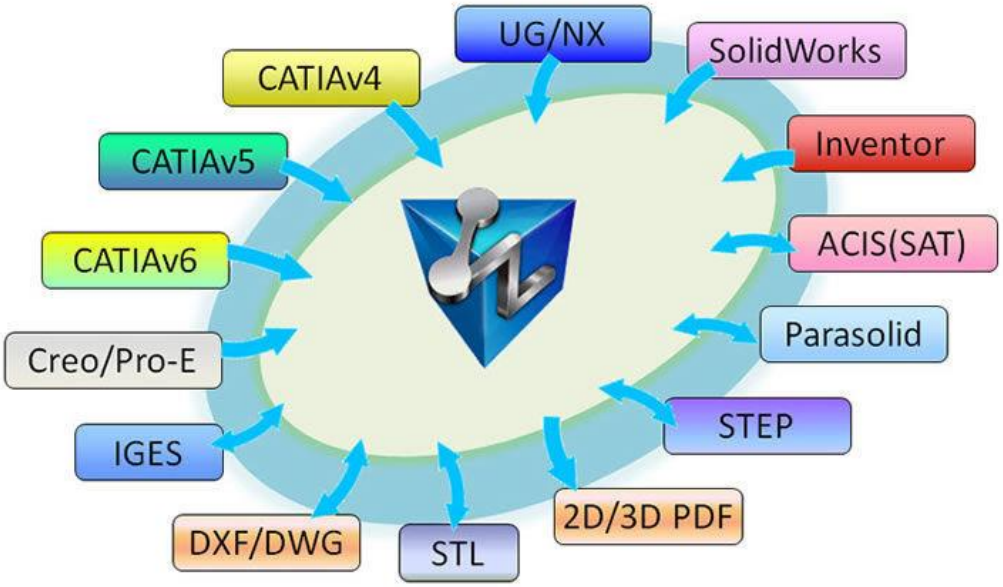

Figure 18: Data Exchange

© Dream Technology System 2018
DTS Group Training Centres Location:
Singapore 2, Kallang Avenue #08-18 CT Hub, Singapore 339407
Johor Bahru Unit 07-04, Austin18, Jalan Austin Perdana 3, Taman Austin Perdana, 81100 Johor Bahru, Johor
Penang 1A-2-02 @ One Precinct (1337) Lengkok Mayang Pasir, 11900 Bayan Baru, Penang.
Kuala Lumpur 221, Block A, Kelana Center Point, Jalan SS7/19, 47301 Petaling Jaya, Selangor
info@dtsys.sg / info@dtsys.ny

Note:

How to read 3D models from other software:

Method 1 (Recommended):

1. Under **File**, select **Import**.

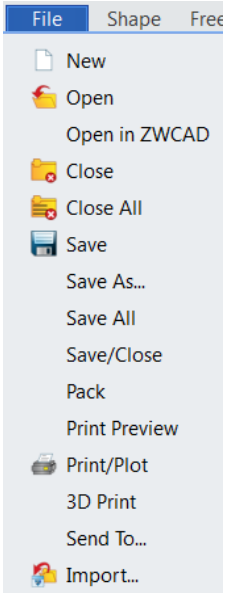

Figure 19: File Import and File Open

2. Select desired **Files of Type** to open and click **Open**.

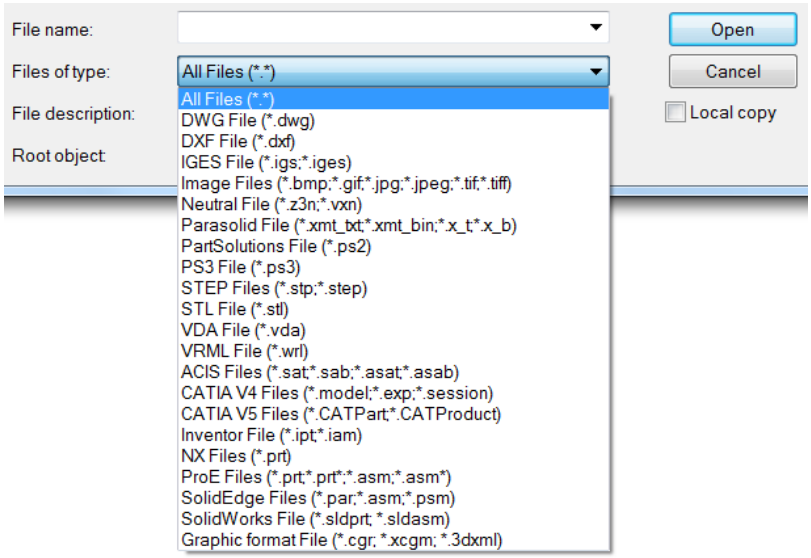

Figure 20: Select File Type

© Dream Technology System 2018
DTS Group Training Centres Location:
Singapore 2, Kallang Avenue #08-18 CT Hub, Singapore 339407
Johor Bahru Unit 07-04, Austin18, Jalan Austin Perdana 3, Taman Austin Perdana, 81100 Johor Bahru, Johor
Penang 1A-2-02 @ One Precinct (1337) Lengkok Mayang Pasir, 11900 Bayan Baru, Penang.
Kuala Lumpur 221, Block A, Kelana Center Point, Jalan SS7/19, 47301 Petaling Jaya, Selangor
info@dtsys.sg / info@dtsys.ny

3. Click **OK.**

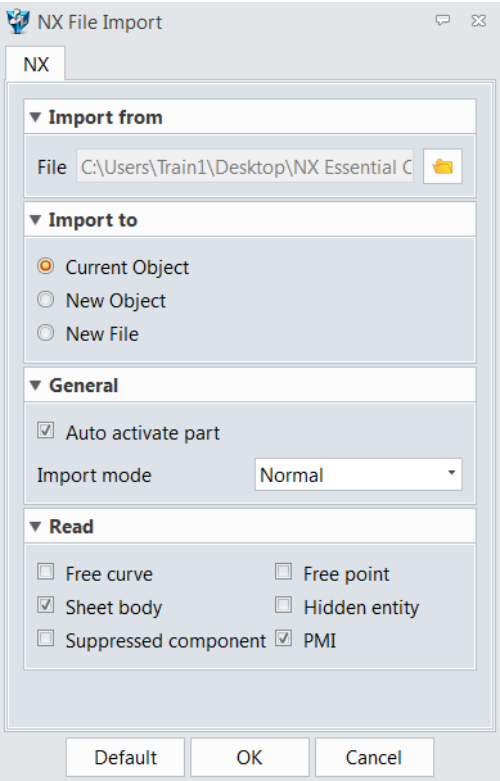

Figure 21: Click OK

Method 2:

1. Under **File**, select **Import**.
2. Select desired **Files of Type** to open and click **Open**.

© Dream Technology System 2018
DTS Group Training Centres Location:
Singapore 2, Kallang Avenue #08-18 CT Hub, Singapore 339407
Johor Bahru Unit 07-04, Austin18, Jalan Austin Perdana 3, Taman Austin Perdana, 81100 Johor Bahru, Johor
Penang 1A-2-02 @ One Precinct (1337) Lengkok Mayang Pasir, 11900 Bayan Baru, Penang.
Kuala Lumpur 221, Block A, Kelana Center Point, Jalan SS7/19, 47301 Petaling Jaya, Selangor
info@dtsys.sg / info@dtsys.ny

Lesson 2: Inquiring 3D Part Information

Purposes

This lesson introduces the different features that are used to inquire 3D part information.

Objectives

Upon completion of the lesson, you will be able to:

- Use the Material Library
- Obtain Mass Properties
- Change WSC
- Check Stock
- Check Distance
- Check Radius
- Check Draft
- Check Thickness
- Obtaining different Section Views

© Dream Technology System 2018
DTS Group Training Centres Location:
Singapore 2, Kallang Avenue #08-18 CT Hub, Singapore 339407
Johor Bahru Unit 07-04, Austin18, Jalan Austin Perdana 3, Taman Austin Perdana, 81100 Johor Bahru, Johor
Penang 1A-2-02 @ One Precinct (1337) Lengkok Mayang Pasir, 11900 Bayan Baru, Penang.
Kuala Lumpur 221, Block A, Kelana Center Point, Jalan SS7/19, 47301 Petaling Jaya, Selangor
info@dtsys.sg / info@dtsys.ny

Materials Library

To assign a desired material to a part, it is necessary to access the materials library.

1. Open the part named **Healing-Result.Z3** inside **lite training** folder found on the Desktop.

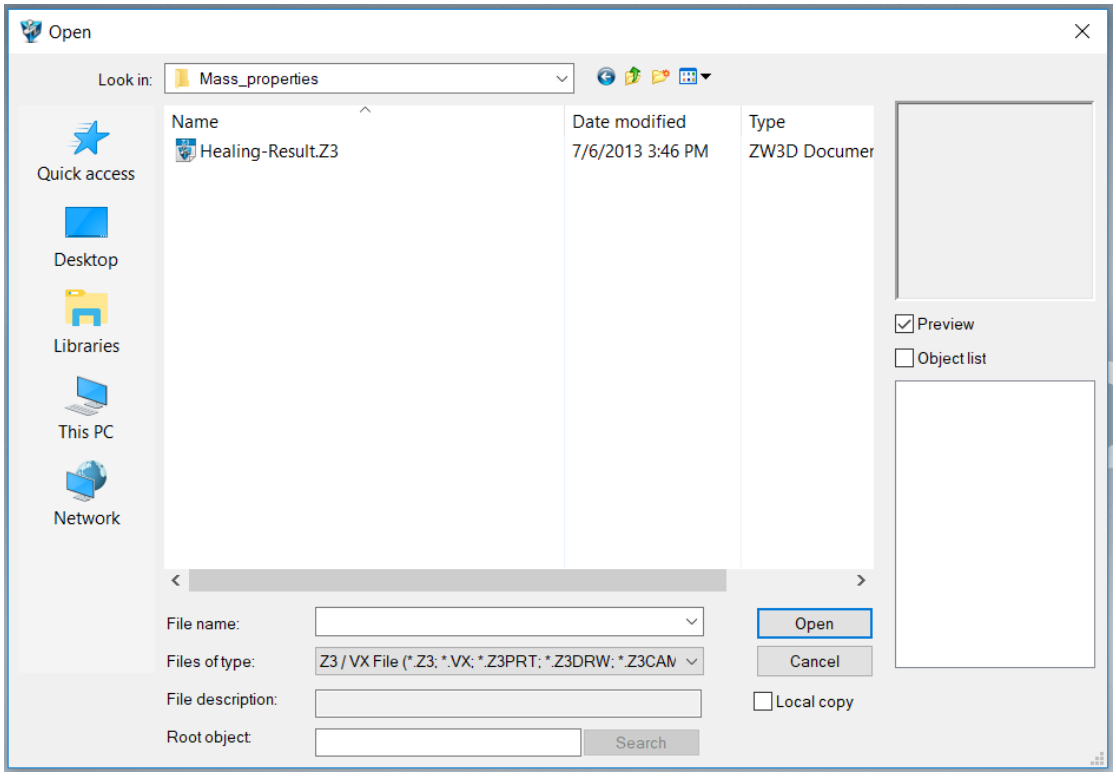

Figure 22: Healing-Result File

2. Under **Tools** ribbon tab, select **Material.**

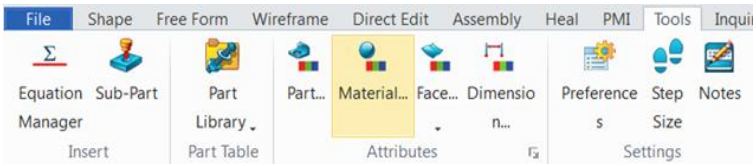

Figure 23: Material icon

© Dream Technology System 2018
DTS Group Training Centres Location:
Singapore 2, Kallang Avenue #08-18 CT Hub, Singapore 339407
Johor Bahru Unit 07-04, Austin18, Jalan Austin Perdana 3, Taman Austin Perdana, 81100 Johor Bahru, Johor
Penang 1A-2-02 @ One Precinct (1337) Lengkok Mayang Pasir, 11900 Bayan Baru, Penang.
Kuala Lumpur 221, Block A, Kelana Center Point, Jalan SS7/19, 47301 Petaling Jaya, Selangor
info@dtsys.sg / info@dtsys.ny

3. Select the **shape** on the right.

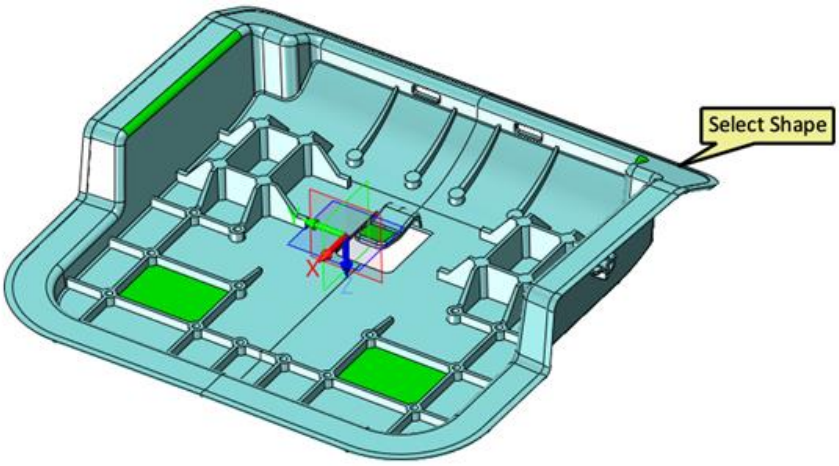

Figure 24: Select Shape

4. Select **Aluminium–6061** from the **drop-down list** under **'-DEFAULT-'.**

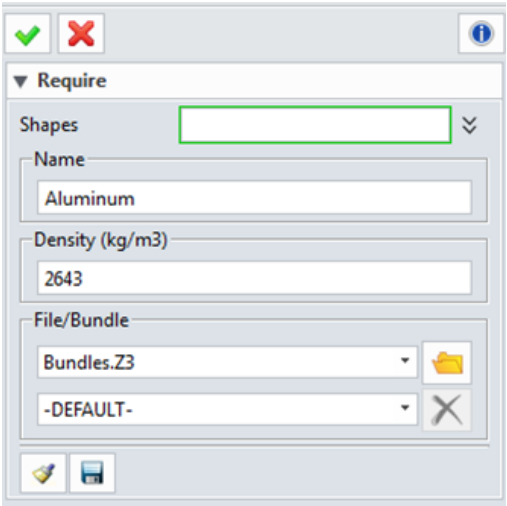

Figure 25: Select from drop-down list

5. Click **OK.**

6. **Result:** Aluminium-6061 is assigned to the part.

© Dream Technology System 2018
DTS Group Training Centres Location:
Singapore 2, Kallang Avenue #08-18 CT Hub, Singapore 339407
Johor Bahru Unit 07-04, Austin18, Jalan Austin Perdana 3, Taman Austin Perdana, 81100 Johor Bahru, Johor
Penang 1A-2-02 @ One Precinct (1337) Lengkok Mayang Pasir, 11900 Bayan Baru, Penang.
Kuala Lumpur 221, Block A, Kelana Center Point, Jalan SS7/19, 47301 Petaling Jaya, Selangor
info@dtsys.sg / info@dtsys.ny

Mass Properties

1. Under **Inquire** ribbon tab, select **Mass Properties.**

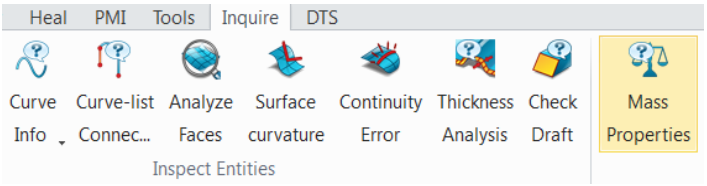

Figure 26: Mass Properties icon

2. Select the **Shape** on the right.

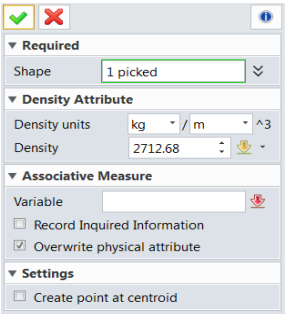

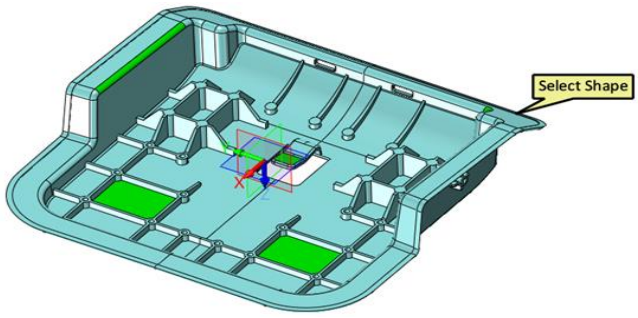

Figure 27: Select Shape

3. Click **OK.**

4. **Result:** Mass Properties obtained.

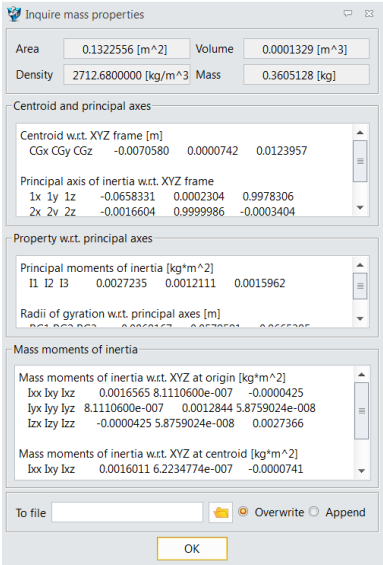

Figure 28: Mass Properties Result

© Dream Technology System 2018
DTS Group Training Centres Location:
Singapore 2, Kallang Avenue #08-18 CT Hub, Singapore 339407
Johor Bahru Unit 07-04, Austin18, Jalan Austin Perdana 3, Taman Austin Perdana, 81100 Johor Bahru, Johor
Penang 1A-2-02 @ One Precinct (1337) Lengkok Mayang Pasir, 11900 Bayan Baru, Penang.
Kuala Lumpur 221, Block A, Kelana Center Point, Jalan SS7/19, 47301 Petaling Jaya, Selangor
info@dtsys.sg / info@dtsys.ny

Change Work Coordinate System (WCS)

The WCS location can be changed so that measurements can be taken from a desired reference point.

1. Under **Shape** ribbon tab, select **Move.**

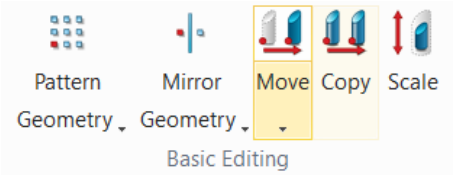

Figure 29: Move icon

2. Select **Shape** on the right.

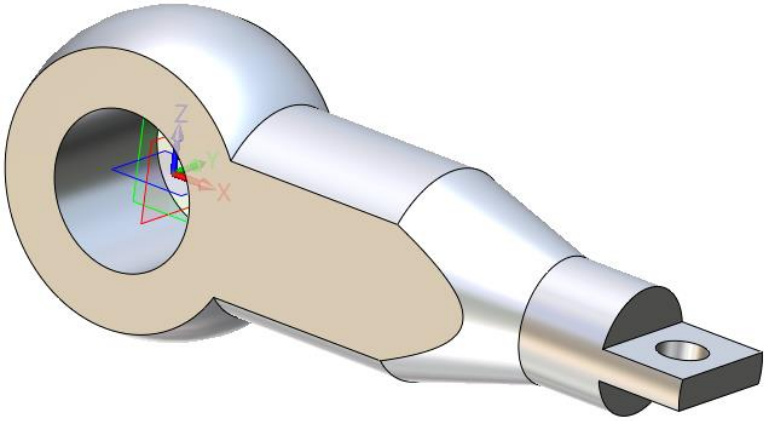

Figure 30: Select Shape

3. Click on the **Position section** and click on a **position** to shift the shape to.

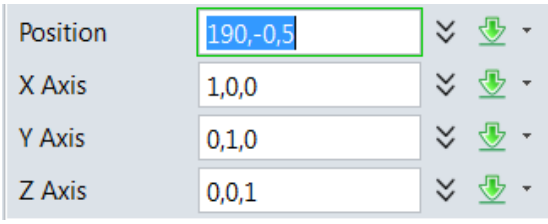

Figure 31: Position Section

© Dream Technology System 2018
DTS Group Training Centres Location:
Singapore 2, Kallang Avenue #08-18 CT Hub, Singapore 339407
Johor Bahru Unit 07-04, Austin18, Jalan Austin Perdana 3, Taman Austin Perdana, 81100 Johor Bahru, Johor
Penang 1A-2-02 @ One Precinct (1337) Lengkok Mayang Pasir, 11900 Bayan Baru, Penang.
Kuala Lumpur 221, Block A, Kelana Center Point, Jalan SS7/19, 47301 Petaling Jaya, Selangor
info@dtsys.sg / info@dtsys.ny

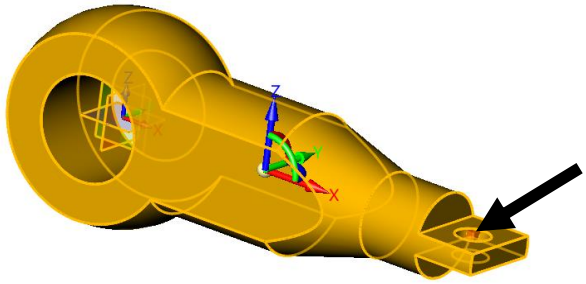

Figure 32: Select input position

4. Click **OK.** ✔

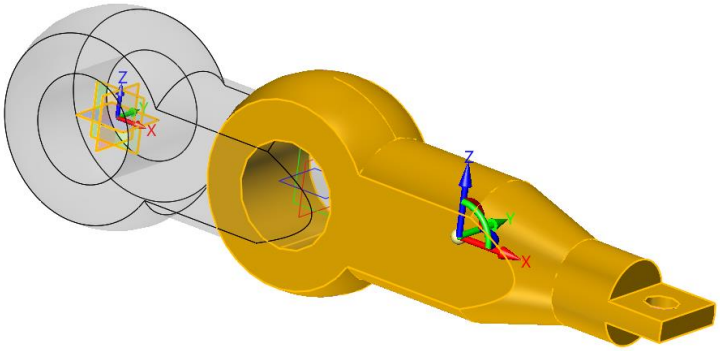

Figure 33: WCS position preview

5. **Result**: WCS is changed.

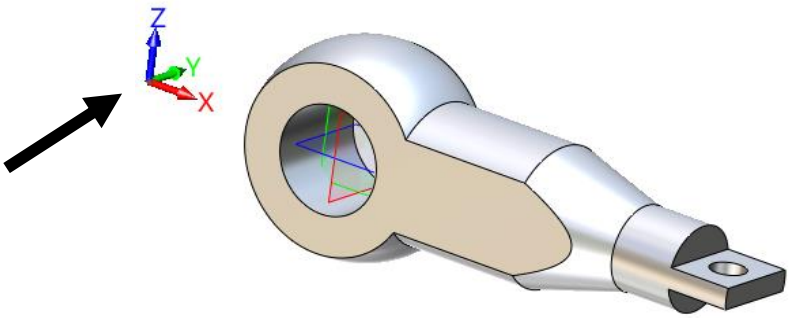

Figure 34: WCS is changed

The X, Y and Z positions will be with referenced to this new WCS.

© Dream Technology System 2018
DTS Group Training Centres Location:
Singapore 2, Kallang Avenue #08-18 CT Hub, Singapore 339407
Johor Bahru Unit 07-04, Austin18, Jalan Austin Perdana 3, Taman Austin Perdana, 81100 Johor Bahru, Johor
Penang 1A-2-02 @ One Precinct (1337) Lengkok Mayang Pasir, 11900 Bayan Baru, Penang.
Kuala Lumpur 221, Block A, Kelana Center Point, Jalan SS7/19, 47301 Petaling Jaya, Selangor
info@dtsys.sg / info@dtsys.ny

Check Stock

1. Under **Shape** ribbon tab, select **Stock.**

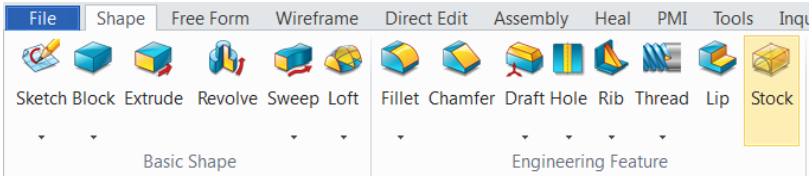

Figure 35: Stock icon

2. Select **Stock** type. In this case, we use **Block.**

   Block
   Cylinder

3. Select **Shape** on the right.

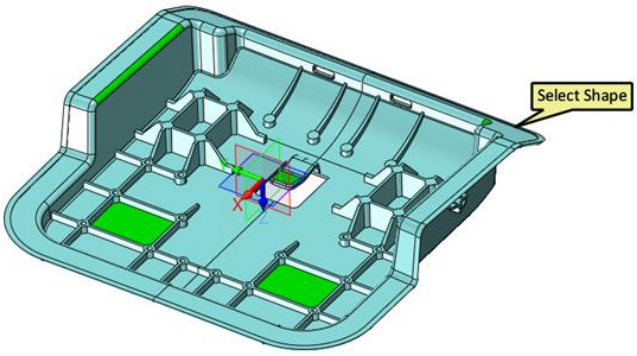

Figure 36: Select Shape

4. Click **OK.**

5. **Result:** Stock (Length, Height, Width) obtained.

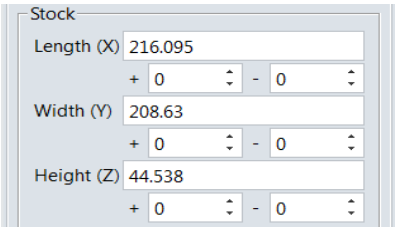

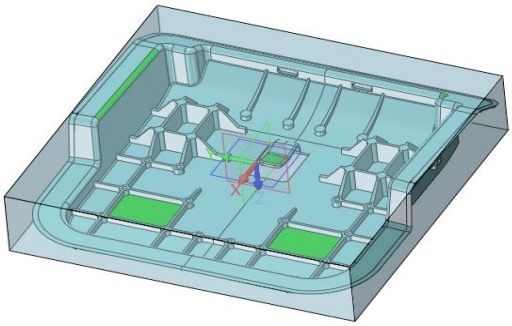

Figure 37: Stock dimension result

© Dream Technology System 2018
DTS Group Training Centres Location:
Singapore 2, Kallang Avenue #08-18 CT Hub, Singapore 339407
Johor Bahru Unit 07-04, Austin18, Jalan Austin Perdana 3, Taman Austin Perdana, 81100 Johor Bahru, Johor
Penang 1A-2-02 @ One Precinct (1337) Lengkok Mayang Pasir, 11900 Bayan Baru, Penang.
Kuala Lumpur 221, Block A, Kelana Center Point, Jalan SS7/19, 47301 Petaling Jaya, Selangor
info@dtsys.sg / info@dtsys.ny

Check Distance

1. Under **Inquire** ribbon tab, select **Distance.**

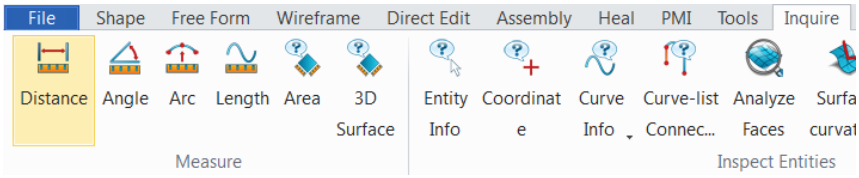

Figure 38: Distance icon

2. Select **Type of Distance** to measure. In this case, we select **Point to Point.**

Point to Point
Geometry to Point
Geometry to Geometry
Plane to Point

3. **Right-click** an empty area in the workspace and select **Center of Curvature** from the list.

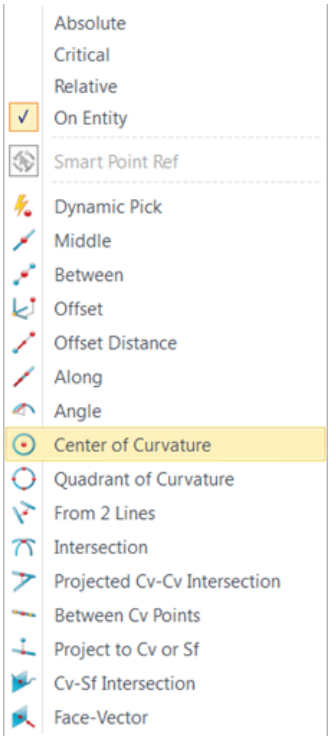

Figure 39: Center of Curvature

4. Click on the **1st point** and **2nd point** as shown on the shape.

© Dream Technology System 2018
DTS Group Training Centres Location:
Singapore 2, Kallang Avenue #08-18 CT Hub, Singapore 339407
Johor Bahru Unit 07-04, Austin18, Jalan Austin Perdana 3, Taman Austin Perdana, 81100 Johor Bahru, Johor
Penang 1A-2-02 @ One Precinct (1337) Lengkok Mayang Pasir, 11900 Bayan Baru, Penang.
Kuala Lumpur 221, Block A, Kelana Center Point, Jalan SS7/19, 47301 Petaling Jaya, Selangor
info@dtsys.sg / info@dtsys.ny

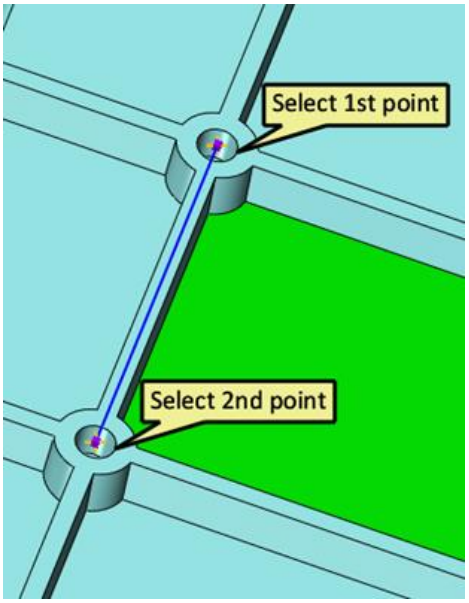

Figure 40: 1st and 2nd point

5. Click **OK.**

6. **Result:** Distance obtained.

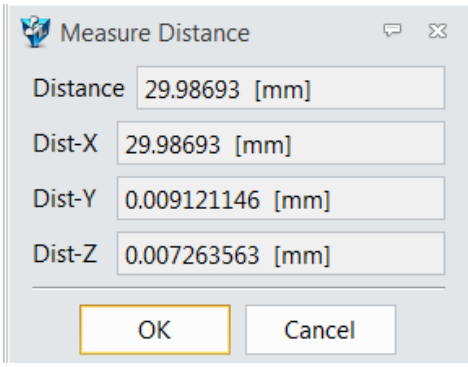

Figure 41: Distance result

© Dream Technology System 2018
DTS Group Training Centres Location:
Singapore 2, Kallang Avenue #08-18 CT Hub, Singapore 339407
Johor Bahru Unit 07-04, Austin18, Jalan Austin Perdana 3, Taman Austin Perdana, 81100 Johor Bahru, Johor
Penang 1A-2-02 @ One Precinct (1337) Lengkok Mayang Pasir, 11900 Bayan Baru, Penang.
Kuala Lumpur 221, Block A, Kelana Center Point, Jalan SS7/19, 47301 Petaling Jaya, Selangor
info@dtsys.sg / info@dtsys.ny

Radius Analysis

1. Under **Inquire** ribbon tab, select **Analyze Faces.**

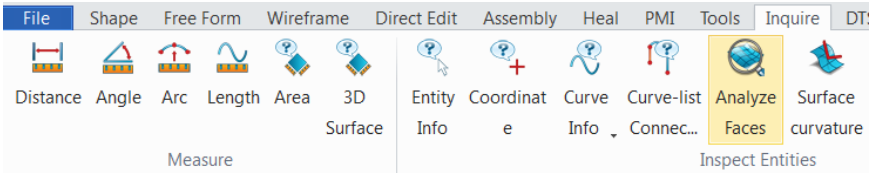

Figure 42: Analyze Faces icon

2. Select **Type of Analysis**. In this case, select **Radius Checking.**

Draft Checking
Radius Checking
Z height

3. Click **OK.**

4. **Result:** Radius analysis result is displayed.

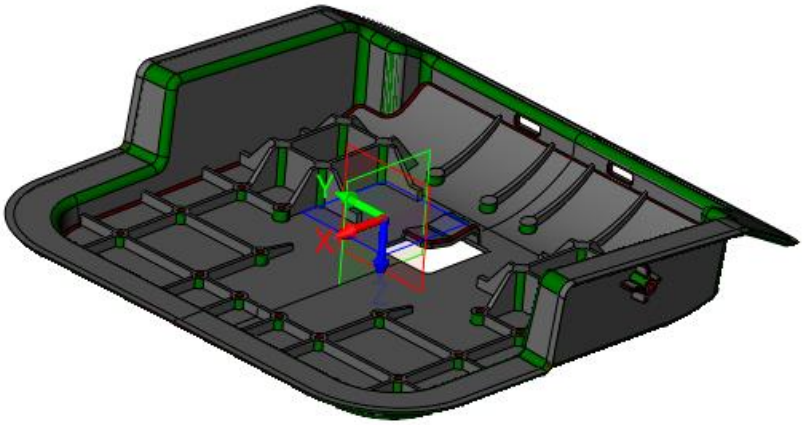

Figure 43: Radius analysis result

© Dream Technology System 2018
DTS Group Training Centres Location:
Singapore 2, Kallang Avenue #08-18 CT Hub, Singapore 339407
Johor Bahru Unit 07-04, Austin18, Jalan Austin Perdana 3, Taman Austin Perdana, 81100 Johor Bahru, Johor
Penang 1A-2-02 @ One Precinct (1337) Lengkok Mayang Pasir, 11900 Bayan Baru, Penang.
Kuala Lumpur 221, Block A, Kelana Center Point, Jalan SS7/19, 47301 Petaling Jaya, Selangor
info@dtsys.sg / info@dtsys.ny

Note:

To achieve better colour display,

- Select **Use rainbow colouring** for more detailed display of colours.
- Change the **Maximum** to an estimated value of the maximum Radius present in the part.

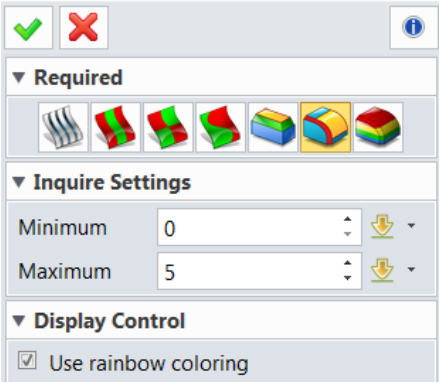

Figure 44: Radius Analysis Settings

Example:

Set **Maximum** to 10, and check the **Use Rainbow colouring** option.

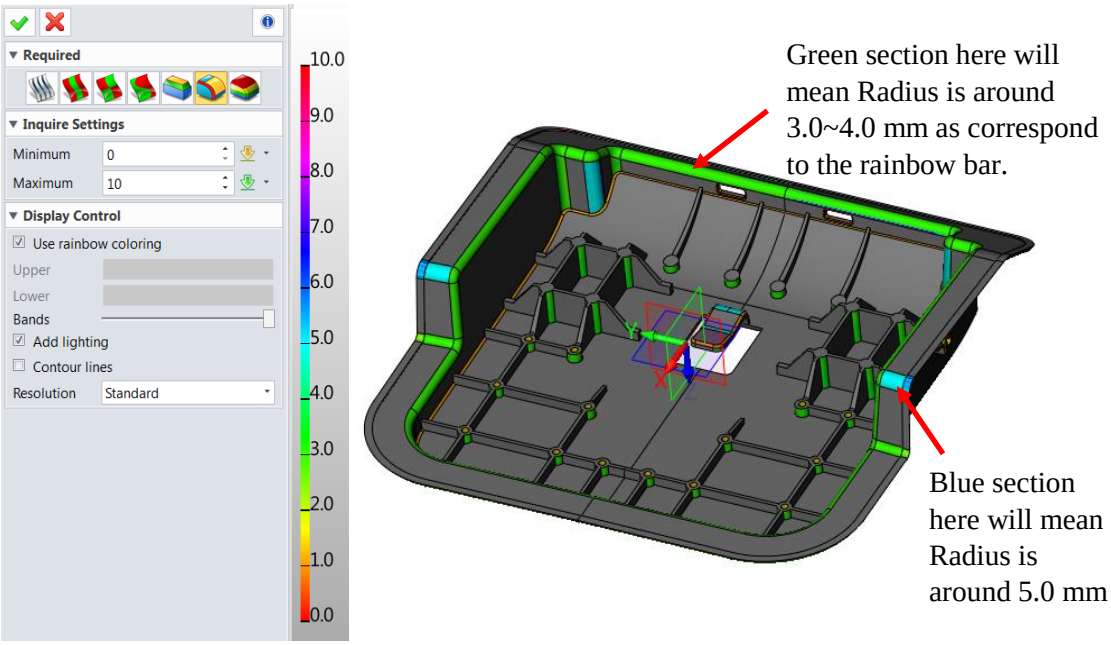

Figure 45: Radius Analysis Example

© Dream Technology System 2018
DTS Group Training Centres Location:
Singapore 2, Kallang Avenue #08-18 CT Hub, Singapore 339407
Johor Bahru Unit 07-04, Austin18, Jalan Austin Perdana 3, Taman Austin Perdana, 81100 Johor Bahru, Johor
Penang 1A-2-02 @ One Precinct (1337) Lengkok Mayang Pasir, 11900 Bayan Baru, Penang.
Kuala Lumpur 221, Block A, Kelana Center Point, Jalan SS7/19, 47301 Petaling Jaya, Selangor
info@dtsys.sg / info@dtsys.ny

Check Radius

1. Under **Inquire** ribbon tab, select **Surface Curvature.**

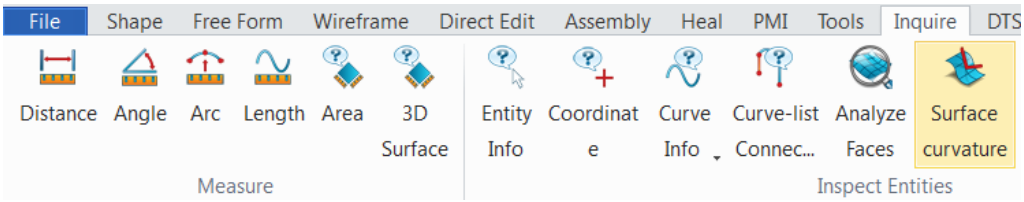

Figure 46: Surface Curvature icon

2. **Hover your mouse** over **any** curvature of the shape to obtain a **specific** radius.

3. **Result:** Radius is obtained.

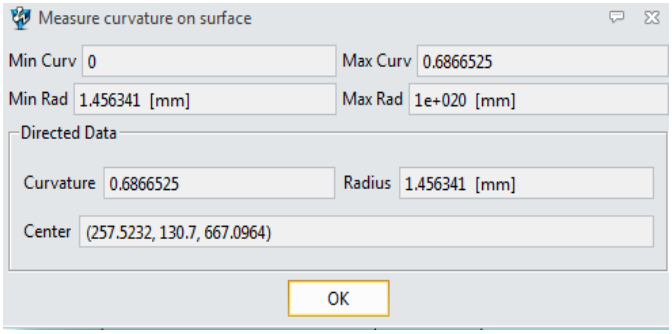

Figure 47: Check Radius Results

© Dream Technology System 2018
DTS Group Training Centres Location:
Singapore 2, Kallang Avenue #08-18 CT Hub, Singapore 339407
Johor Bahru Unit 07-04, Austin18, Jalan Austin Perdana 3, Taman Austin Perdana, 81100 Johor Bahru, Johor
Penang 1A-2-02 @ One Precinct (1337) Lengkok Mayang Pasir, 11900 Bayan Baru, Penang.
Kuala Lumpur 221, Block A, Kelana Center Point, Jalan SS7/19, 47301 Petaling Jaya, Selangor
info@dtsys.sg / info@dtsys.ny

Draft Analysis

1. Under **Inquire** ribbon tab, select **Analyze Faces.**

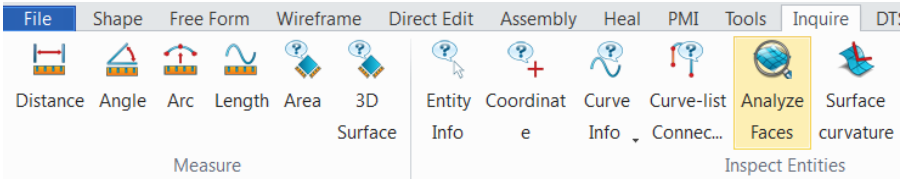

Figure 48: Analyze Face icon

2. Select **Type of Analysis**. In this case, select **Draft Checking.**

Draft Checking
Radius Checking
Z height

3. Click **OK.**

4. **Result:** Draft analysis result is displayed.

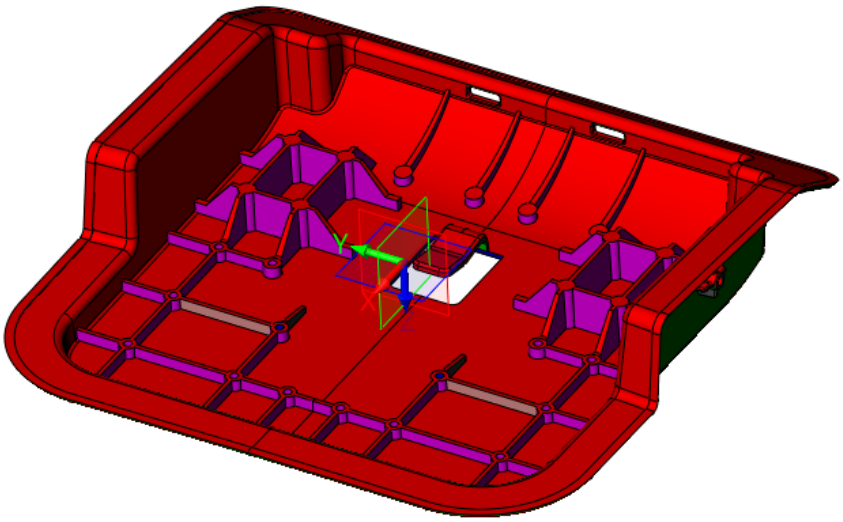

Figure 49: Draft Analysis Result

© Dream Technology System 2018
DTS Group Training Centres Location:
Singapore 2, Kallang Avenue #08-18 CT Hub, Singapore 339407
Johor Bahru Unit 07-04, Austin18, Jalan Austin Perdana 3, Taman Austin Perdana, 81100 Johor Bahru, Johor
Penang 1A-2-02 @ One Precinct (1337) Lengkok Mayang Pasir, 11900 Bayan Baru, Penang.
Kuala Lumpur 221, Block A, Kelana Center Point, Jalan SS7/19, 47301 Petaling Jaya, Selangor
info@dtsys.sg / info@dtsys.ny

Note:

To achieve better colour display,

- Select **Use rainbow colouring** for more detailed display of colours.
- Change the **Angle** to an estimated value of the maximum draft angle of the part.

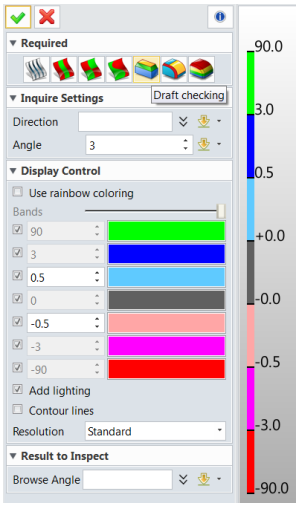

Figure 50: Draft Analysis Setting

Example:

Set **Maximum** to 10, and check the **Use Rainbow colouring option**.

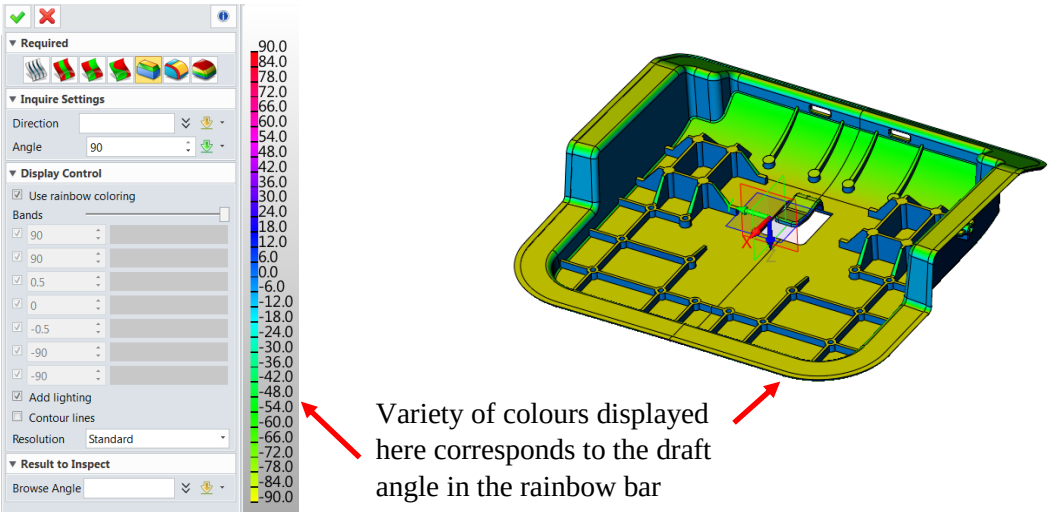

Figure 51: Draft Analysis Example

© Dream Technology System 2018
DTS Group Training Centres Location:
Singapore 2, Kallang Avenue #08-18 CT Hub, Singapore 339407
Johor Bahru Unit 07-04, Austin18, Jalan Austin Perdana 3, Taman Austin Perdana, 81100 Johor Bahru, Johor
Penang 1A-2-02 @ One Precinct (1337) Lengkok Mayang Pasir, 11900 Bayan Baru, Penang.
Kuala Lumpur 221, Block A, Kelana Center Point, Jalan SS7/19, 47301 Petaling Jaya, Selangor
info@dtsys.sg / info@dtsys.ny

Check Draft

1. Under **Inquire** ribbon tab, select **Check Draft.**

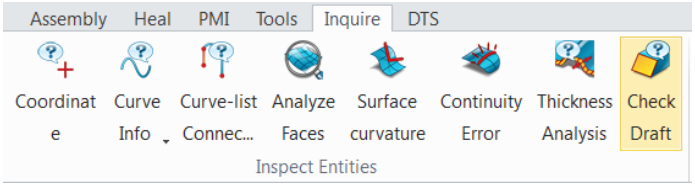

Figure 52: Check Draft icon

2. Select **Browse Angle** section.

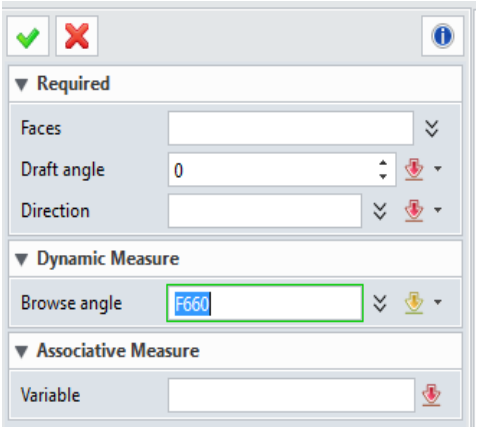

Figure 53: Browse Angle

3. **Hover your mouse** over **any** surface to check the draft angle.
4. **Result:** Draft angle is obtained. (Angle reference to WCS)

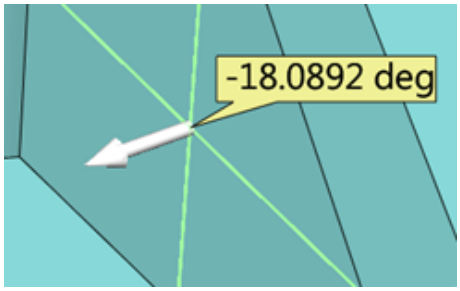

Figure 54: Draft Angle Result

© Dream Technology System 2018
DTS Group Training Centres Location:
Singapore 2, Kallang Avenue #08-18 CT Hub, Singapore 339407
Johor Bahru Unit 07-04, Austin18, Jalan Austin Perdana 3, Taman Austin Perdana, 81100 Johor Bahru, Johor
Penang 1A-2-02 @ One Precinct (1337) Lengkok Mayang Pasir, 11900 Bayan Baru, Penang.
Kuala Lumpur 221, Block A, Kelana Center Point, Jalan SS7/19, 47301 Petaling Jaya, Selangor
info@dtsys.sg / info@dtsys.ny

Create Draft

After doing a Draft Analysis, it is observed that there are some surfaces that are **Black** in colour. This means that the surfaces are **flat** (Draft angle equals to zero).

Try creating a draft using the following steps:

1. **Hover your mouse** until the parting line as indicated below is highlighted in **yellow.**

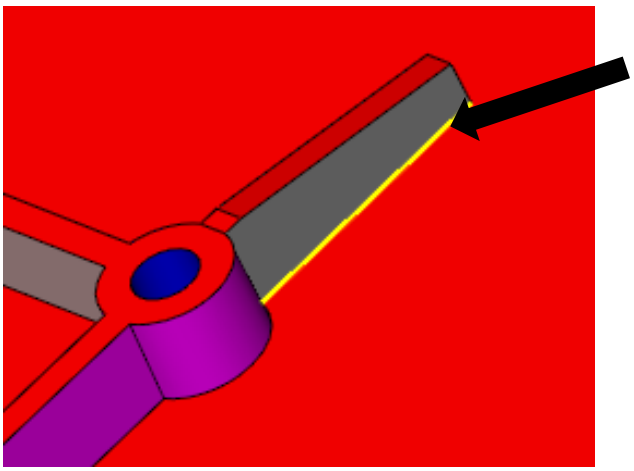

Figure 55: Parting line

2. **Right-click** and select **Draft.**

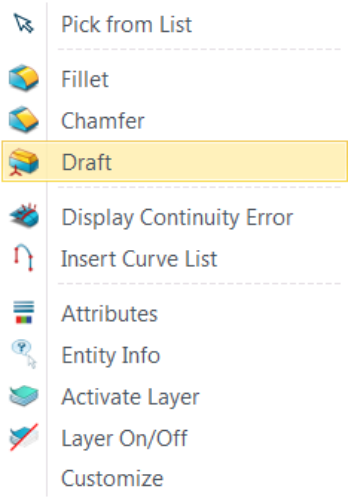

Figure 56: Select Draft

3. Input the value of **Angle as 3.**

© Dream Technology System 2018
DTS Group Training Centres Location:
Singapore 2, Kallang Avenue #08-18 CT Hub, Singapore 339407
Johor Bahru Unit 07-04, Austin18, Jalan Austin Perdana 3, Taman Austin Perdana, 81100 Johor Bahru, Johor
Penang 1A-2-02 @ One Precinct (1337) Lengkok Mayang Pasir, 11900 Bayan Baru, Penang.
Kuala Lumpur 221, Block A, Kelana Center Point, Jalan SS7/19, 47301 Petaling Jaya, Selangor
info@dtsys.sg / info@dtsys.ny

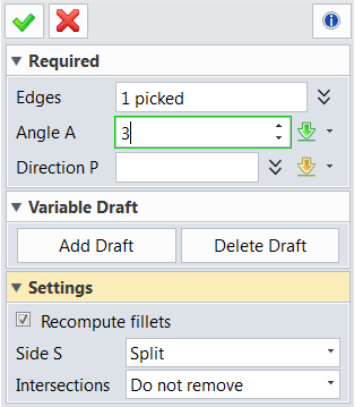

Figure 57: Input Value

4. Click **OK.**

5. **Result:** Draft angle is created. The surface is no longer black.

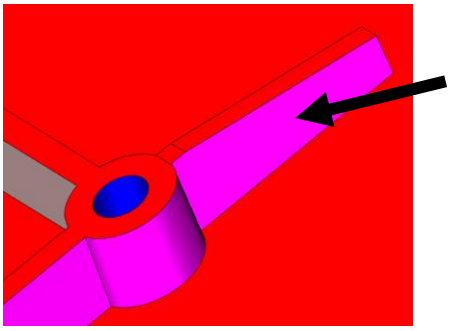

Figure 58: Create Draft Result

© Dream Technology System 2018
DTS Group Training Centres Location:
Singapore 2, Kallang Avenue #08-18 CT Hub, Singapore 339407
Johor Bahru Unit 07-04, Austin18, Jalan Austin Perdana 3, Taman Austin Perdana, 81100 Johor Bahru, Johor
Penang 1A-2-02 @ One Precinct (1337) Lengkok Mayang Pasir, 11900 Bayan Baru, Penang.
Kuala Lumpur 221, Block A, Kelana Center Point, Jalan SS7/19, 47301 Petaling Jaya, Selangor
info@dtsys.sg / info@dtsys.ny

Check Thickness

1. Under **Inquire** ribbon tab, select **Thickness Analysis.**

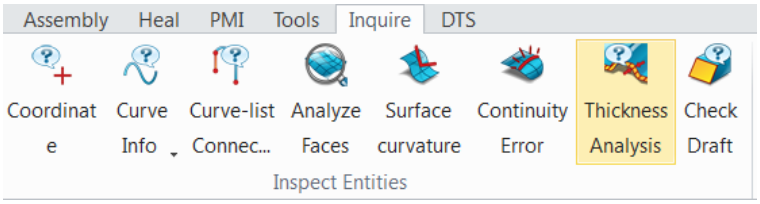

Figure 59: Thickness Analysis icon

2. Select **Browse T** section.

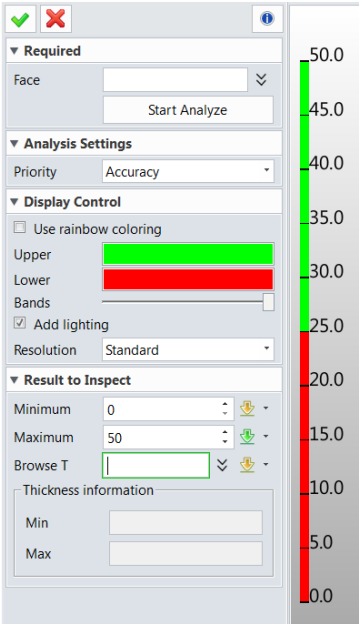

Figure 60: Browse T Section

3. **Hover your mouse** on **any** surface of the part to check the thickness.
4. **Result:** Thickness is obtained. (X, Y, Z distance referenced to WCS)

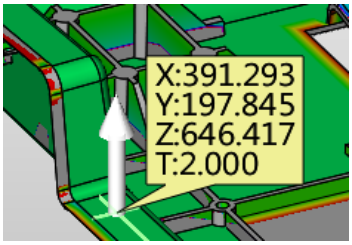

Figure 61: Thickness Result

© Dream Technology System 2018
DTS Group Training Centres Location:
Singapore 2, Kallang Avenue #08-18 CT Hub, Singapore 339407
Johor Bahru Unit 07-04, Austin18, Jalan Austin Perdana 3, Taman Austin Perdana, 81100 Johor Bahru, Johor
Penang 1A-2-02 @ One Precinct (1337) Lengkok Mayang Pasir, 11900 Bayan Baru, Penang.
Kuala Lumpur 221, Block A, Kelana Center Point, Jalan SS7/19, 47301 Petaling Jaya, Selangor
info@dtsys.sg / info@dtsys.ny

Note:

To achieve better colour display,

- Select **Use rainbow colouring** for more detailed display of colours.
- Change the **Maximum** to an estimated maximum thickness of the part
- Select the Face then click on **Start Analyse** to Analyse the whole part. However, this requires **more time** depending on the complexity of the part.

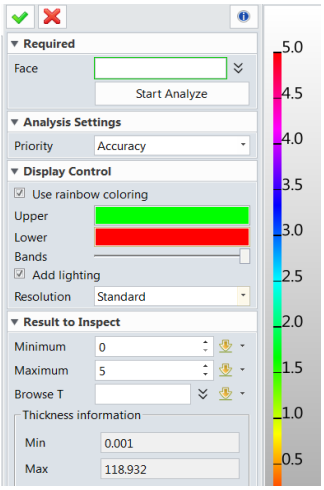

Figure 62: Check Thickness Settings

Example:

Set **Maximum** to 5, and check the **Use Rainbow colouring** option.
Then click **Start Analyse**.

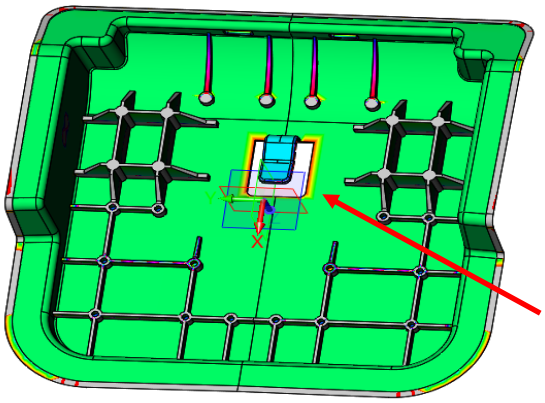

Variety of colours displayed here corresponds to the thickness shown in the rainbow bar

Figure 63: Check Thickness Example

© Dream Technology System 2018
DTS Group Training Centres Location:
Singapore 2, Kallang Avenue #08-18 CT Hub, Singapore 339407
Johor Bahru Unit 07-04, Austin18, Jalan Austin Perdana 3, Taman Austin Perdana, 81100 Johor Bahru, Johor
Penang 1A-2-02 @ One Precinct (1337) Lengkok Mayang Pasir, 11900 Bayan Baru, Penang.
Kuala Lumpur 221, Block A, Kelana Center Point, Jalan SS7/19, 47301 Petaling Jaya, Selangor
info@dtsys.sg / info@dtsys.ny

Section View

1. Open the part named **Dynamic section & Mass Property.Z3** inside **lite training** folder found on the Desktop.

2. Under **Inquire** ribbon tab, select **Section.**

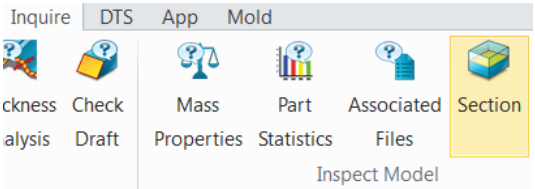

Figure 64: Section icon

3. Choose the **Type of Sectioning.** In this case, select **Section at plane.**

   Section at plane
   Section with slice
   Section with envelope
   Section with profile

4. Choose the **Alignment of Plane.** In this case, select **Activate front plane.**

   Activate top plane
   Activate front plane
   Activate right plane
   Activate left plane
   Activate back plane
   Activate bottom plane

5. Choose whether to **hide or show** the **sectioned shape.** In this case, we select **Invisible sectioned shape**

   Invisible sectioned shape
   Wireframe sectioned shape

© Dream Technology System 2018
DTS Group Training Centres Location:
Singapore 2, Kallang Avenue #08-18 CT Hub, Singapore 339407
Johor Bahru Unit 07-04, Austin18, Jalan Austin Perdana 3, Taman Austin Perdana, 81100 Johor Bahru, Johor
Penang 1A-2-02 @ One Precinct (1337) Lengkok Mayang Pasir, 11900 Bayan Baru, Penang.
Kuala Lumpur 221, Block A, Kelana Center Point, Jalan SS7/19, 47301 Petaling Jaya, Selangor
info@dtsys.sg / info@dtsys.ny

6. Select **Hatch style.** In this case, we select **No cap overlay.**

No cap overlay
Hatch overlay
Grid overlay

7. **Click and hold** either X, Y or Z direction as shown at the origin of the shape on the right.

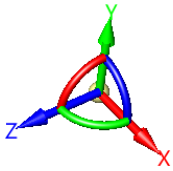

Figure 65: XYZ origin axis

8. **Slide along** the axis to section the shape.

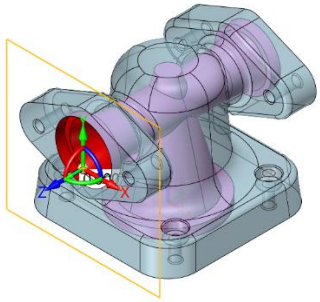

Figure 66: Slide to section

9. **Result:** Section view obtained.

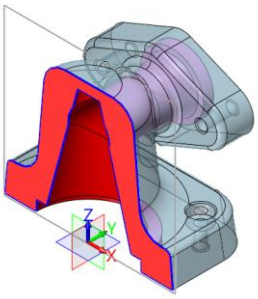

Figure 67: Section Result

Example:

© Dream Technology System 2018
DTS Group Training Centres Location:
Singapore 2, Kallang Avenue #08-18 CT Hub, Singapore 339407
Johor Bahru Unit 07-04, Austin18, Jalan Austin Perdana 3, Taman Austin Perdana, 81100 Johor Bahru, Johor
Penang 1A-2-02 @ One Precinct (1337) Lengkok Mayang Pasir, 11900 Bayan Baru, Penang.
Kuala Lumpur 221, Block A, Kelana Center Point, Jalan SS7/19, 47301 Petaling Jaya, Selangor
info@dtsys.sg / info@dtsys.ny

Try to achieve the following Section Views given the clues below:

Section View A	Section View B	Section View C
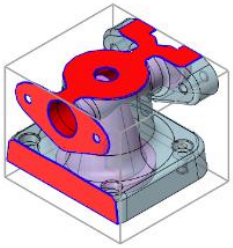	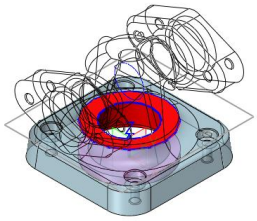	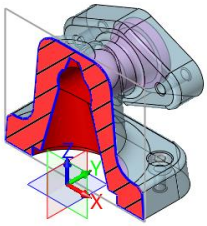
Section with envelope	**Wireframe shown**	**Hatched line selected**
Type of Sectioning:		
Alignment of Plane:		
Show/Hide Sectioned shape:		
Hatched Style:		

© Dream Technology System 2018
DTS Group Training Centres Location:
Singapore 2, Kallang Avenue #08-18 CT Hub, Singapore 339407
Johor Bahru Unit 07-04, Austin18, Jalan Austin Perdana 3, Taman Austin Perdana, 81100 Johor Bahru, Johor
Penang 1A-2-02 @ One Precinct (1337) Lengkok Mayang Pasir, 11900 Bayan Baru, Penang.
Kuala Lumpur 221, Block A, Kelana Center Point, Jalan SS7/19, 47301 Petaling Jaya, Selangor
info@dtsys.sg / info@dtsys.ny

Note:

It is also possible to achieve **uneven sectioning** in the 3D environment as shown:

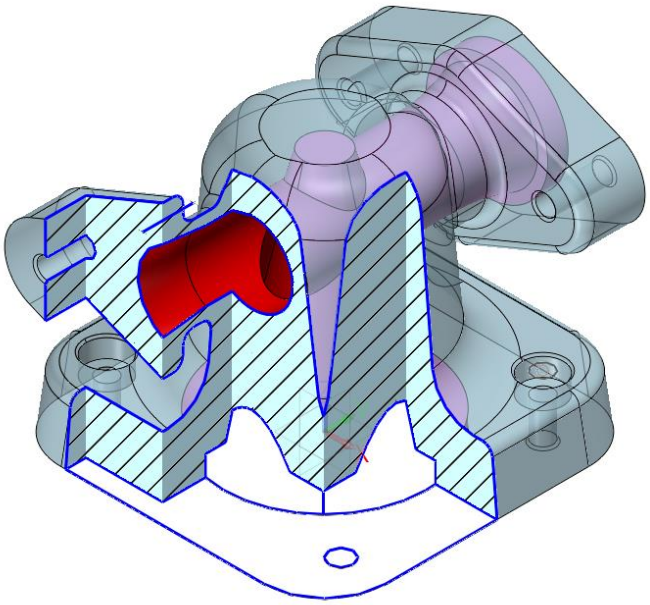

Figure 68: Uneven Sectioning

1. Open the part named **Uneven Sectioning.Z3** inside **lite training** folder found on the Desktop.
2. Under **Shape** ribbon tab, select **Sketch.**

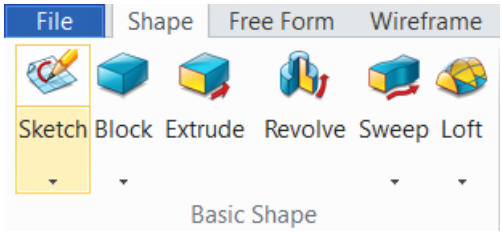

Figure 69: Sketch icon

© Dream Technology System 2018
DTS Group Training Centres Location:
Singapore 2, Kallang Avenue #08-18 CT Hub, Singapore 339407
Johor Bahru Unit 07-04, Austin18, Jalan Austin Perdana 3, Taman Austin Perdana, 81100 Johor Bahru, Johor
Penang 1A-2-02 @ One Precinct (1337) Lengkok Mayang Pasir, 11900 Bayan Baru, Penang.
Kuala Lumpur 221, Block A, Kelana Center Point, Jalan SS7/19, 47301 Petaling Jaya, Selangor
info@dtsys.sg / info@dtsys.ny

3. Select the **XY plane** and click **OK**. You will enter the 2D sketching environment.

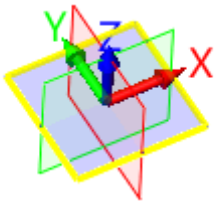

Figure 70: XY plane selected

4. Under **Sketch** ribbon tab, select **Line.**

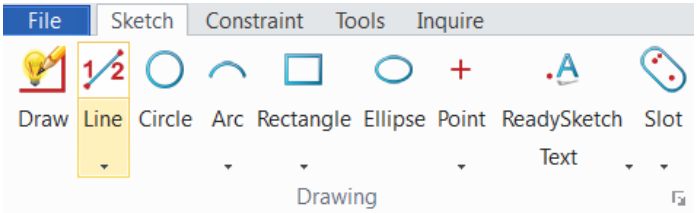

Figure 71: Line icon

5. Draw a simple sketch as shown, dimensions not needed. Note that the sketch drawn must be a **CLOSED** sketch.

© Dream Technology System 2018
DTS Group Training Centres Location:
Singapore 2, Kallang Avenue #08-18 CT Hub, Singapore 339407
Johor Bahru Unit 07-04, Austin18, Jalan Austin Perdana 3, Taman Austin Perdana, 81100 Johor Bahru, Johor
Penang 1A-2-02 @ One Precinct (1337) Lengkok Mayang Pasir, 11900 Bayan Baru, Penang.
Kuala Lumpur 221, Block A, Kelana Center Point, Jalan SS7/19, 47301 Petaling Jaya, Selangor
info@dtsys.sg / info@dtsys.ny

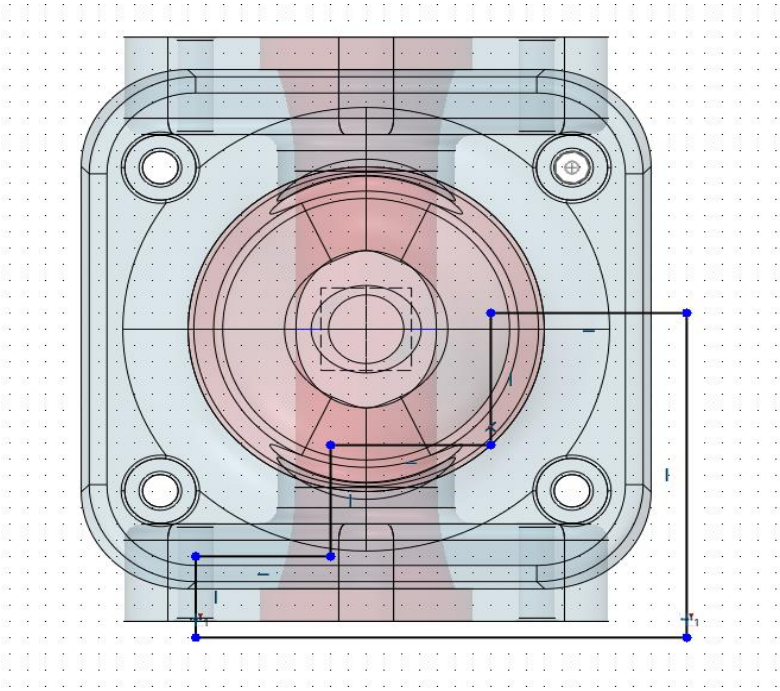

Figure 72: Closed sketch

6. Exit the 2D Environment by clicking the exit icon.
7. Under **Inquire** ribbon tab, select **Section**.

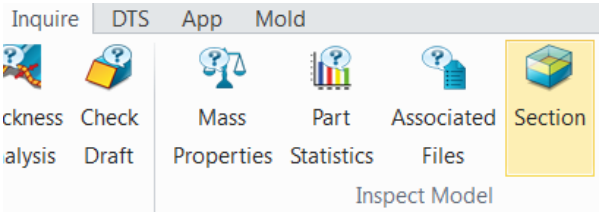

Figure 73: Section icon

8. Choose the **Type of Sectioning.** In this case, select **Section with profile.**
9. Click on the **Profile section** and select the sketch drawn in **Step 5.**

© Dream Technology System 2018
DTS Group Training Centres Location:
Singapore 2, Kallang Avenue #08-18 CT Hub, Singapore 339407
Johor Bahru Unit 07-04, Austin18, Jalan Austin Perdana 3, Taman Austin Perdana, 81100 Johor Bahru, Johor
Penang 1A-2-02 @ One Precinct (1337) Lengkok Mayang Pasir, 11900 Bayan Baru, Penang.
Kuala Lumpur 221, Block A, Kelana Center Point, Jalan SS7/19, 47301 Petaling Jaya, Selangor
info@dtsys.sg / info@dtsys.ny

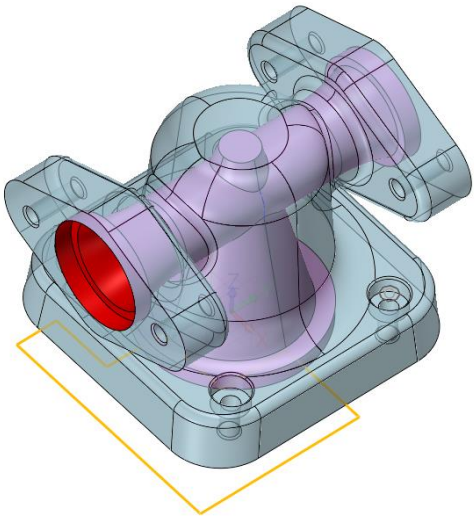

Figure 74: Select sketch as profile section

10. Under Section Plane Type, Select **Symmetrical** and input **End E value of 130.** Select **Hatch Style** as shown below.

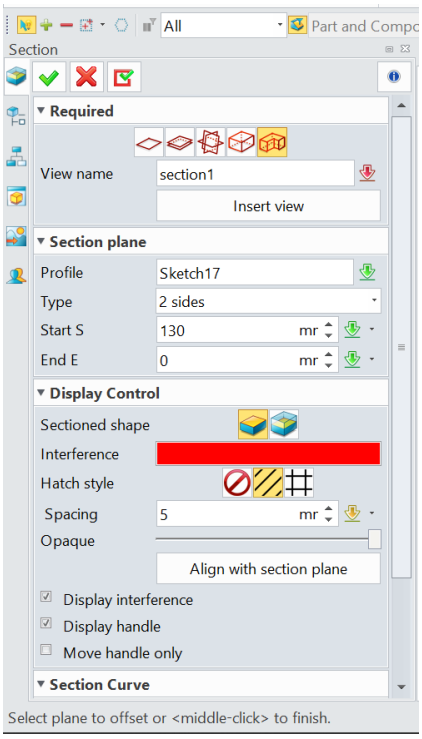

Figure 75: Input Settings

© Dream Technology System 2018
DTS Group Training Centres Location:
Singapore 2, Kallang Avenue #08-18 CT Hub, Singapore 339407
Johor Bahru Unit 07-04, Austin18, Jalan Austin Perdana 3, Taman Austin Perdana, 81100 Johor Bahru, Johor
Penang 1A-2-02 @ One Precinct (1337) Lengkok Mayang Pasir, 11900 Bayan Baru, Penang.
Kuala Lumpur 221, Block A, Kelana Center Point, Jalan SS7/19, 47301 Petaling Jaya, Selangor
info@dtsys.sg / info@dtsys.ny

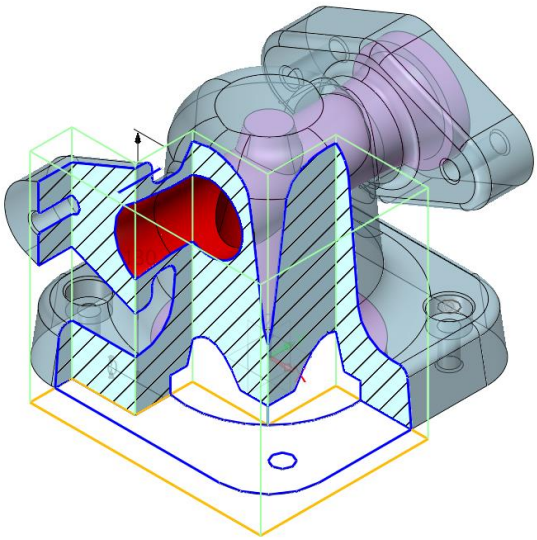

Figure 76: Section Preview

11. Click **OK**.

12. **Result**:

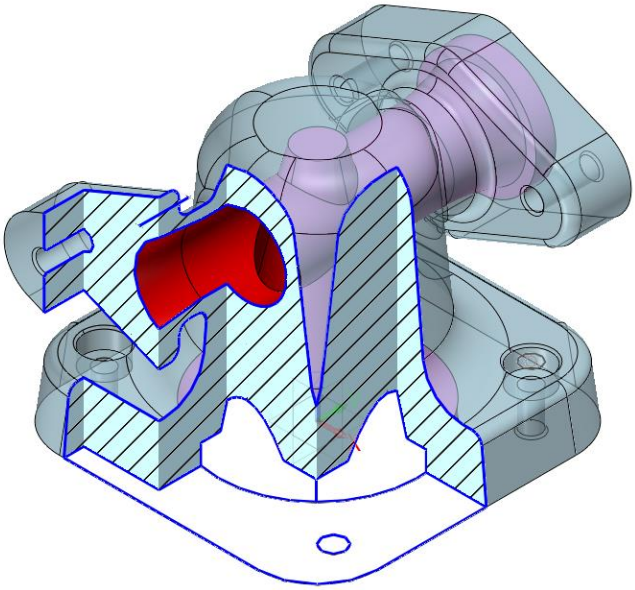

Figure 77: Uneven Sectioning obtained

© Dream Technology System 2018
DTS Group Training Centres Location:
Singapore 2, Kallang Avenue #08-18 CT Hub, Singapore 339407
Johor Bahru Unit 07-04, Austin18, Jalan Austin Perdana 3, Taman Austin Perdana, 81100 Johor Bahru, Johor
Penang 1A-2-02 @ One Precinct (1337) Lengkok Mayang Pasir, 11900 Bayan Baru, Penang.
Kuala Lumpur 221, Block A, Kelana Center Point, Jalan SS7/19, 47301 Petaling Jaya, Selangor
info@dtsys.sg / info@dtsys.ny

Lesson 3: Sketching and Modelling

Purposes

This lesson introduces how to create a sketch and creating a model from the sketch.

Objectives

Upon completion of the lesson, you will be able to:

- Create sketches
- Add constrains in sketches
- Add dimension in sketches
- Create Models from Sketches.

© Dream Technology System 2018
DTS Group Training Centres Location:
Singapore 2, Kallang Avenue #08-18 CT Hub, Singapore 339407
Johor Bahru Unit 07-04, Austin18, Jalan Austin Perdana 3, Taman Austin Perdana, 81100 Johor Bahru, Johor
Penang 1A-2-02 @ One Precinct (1337) Lengkok Mayang Pasir, 11900 Bayan Baru, Penang.
Kuala Lumpur 221, Block A, Kelana Center Point, Jalan SS7/19, 47301 Petaling Jaya, Selangor
info@dtsys.sg / info@dtsys.ny

Creating Sketch

1. Open a **new part** file.

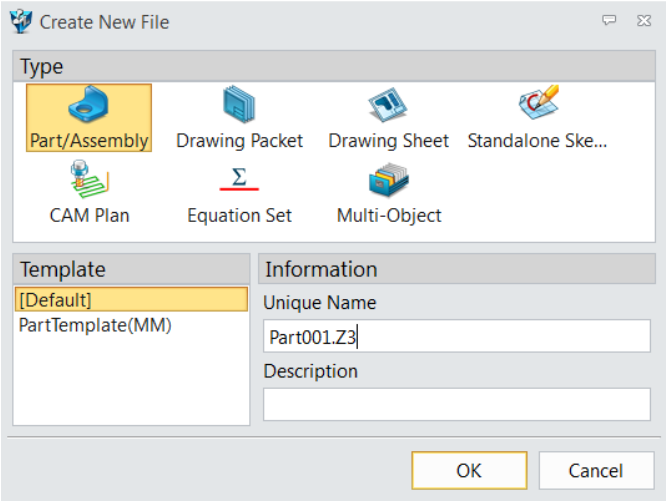

Figure 78: Create new part file

2. Under **Shape** ribbon tab, select **Sketch.**

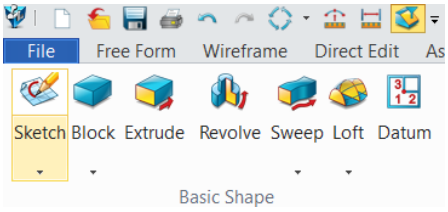

Figure 79: Sketch icon

3. Select **any plane**. In this case, we select the XY plane.

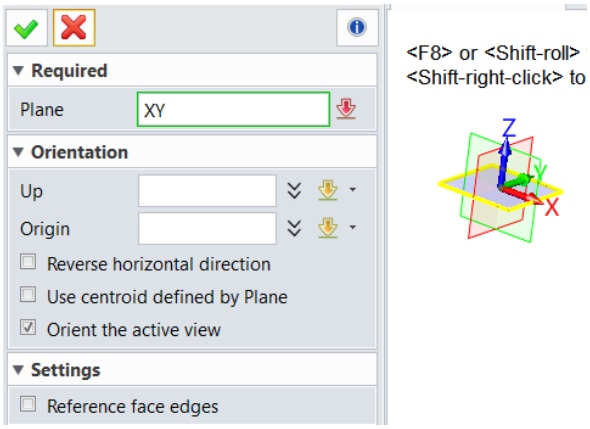

Figure 80: Select XY plane

© Dream Technology System 2018
DTS Group Training Centres Location:
Singapore 2, Kallang Avenue #08-18 CT Hub, Singapore 339407
Johor Bahru Unit 07-04, Austin18, Jalan Austin Perdana 3, Taman Austin Perdana, 81100 Johor Bahru, Johor
Penang 1A-2-02 @ One Precinct (1337) Lengkok Mayang Pasir, 11900 Bayan Baru, Penang.
Kuala Lumpur 221, Block A, Kelana Center Point, Jalan SS7/19, 47301 Petaling Jaya, Selangor
info@dtsys.sg / info@dtsys.ny

4. Under **Sketch**, select **Draw** to create sketches.

   Alternatively, select any basic shapes to such as circles, rectangles, ellipse and slots for faster sketching.

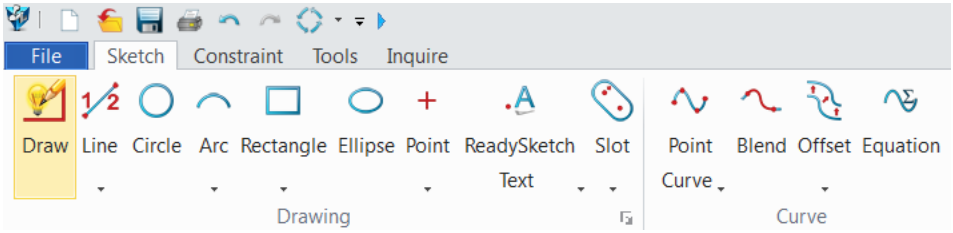

Figure 81: Draw icon

5. Under **Constrain** tab, select the **Add Constrains.** Then select the lines that is to be constrained.

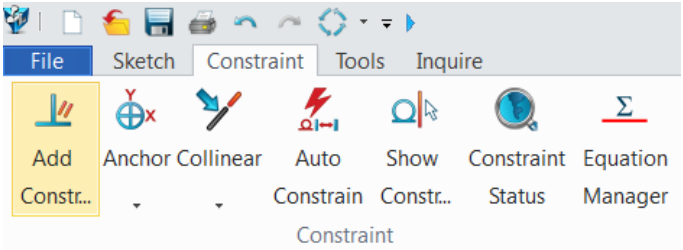

Figure 82: Select Add Constrain

6. Under **Constrain** tab, select **Quick Dimension**.

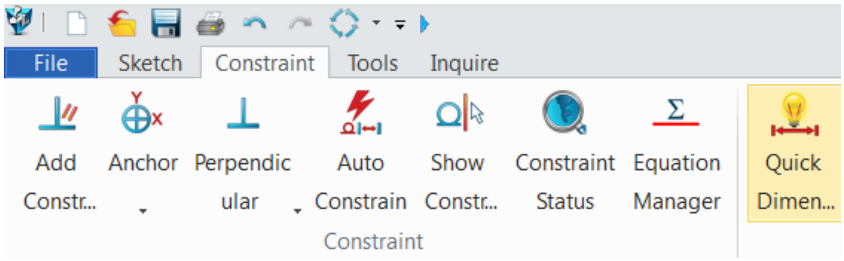

Figure 83: Quick Dimension icon

© Dream Technology System 2018
DTS Group Training Centres Location:
Singapore 2, Kallang Avenue #08-18 CT Hub, Singapore 339407
Johor Bahru Unit 07-04, Austin18, Jalan Austin Perdana 3, Taman Austin Perdana, 81100 Johor Bahru, Johor
Penang 1A-2-02 @ One Precinct (1337) Lengkok Mayang Pasir, 11900 Bayan Baru, Penang.
Kuala Lumpur 221, Block A, Kelana Center Point, Jalan SS7/19, 47301 Petaling Jaya, Selangor
info@dtsys.sg / info@dtsys.ny

Example:

Try obtaining the sketch below:

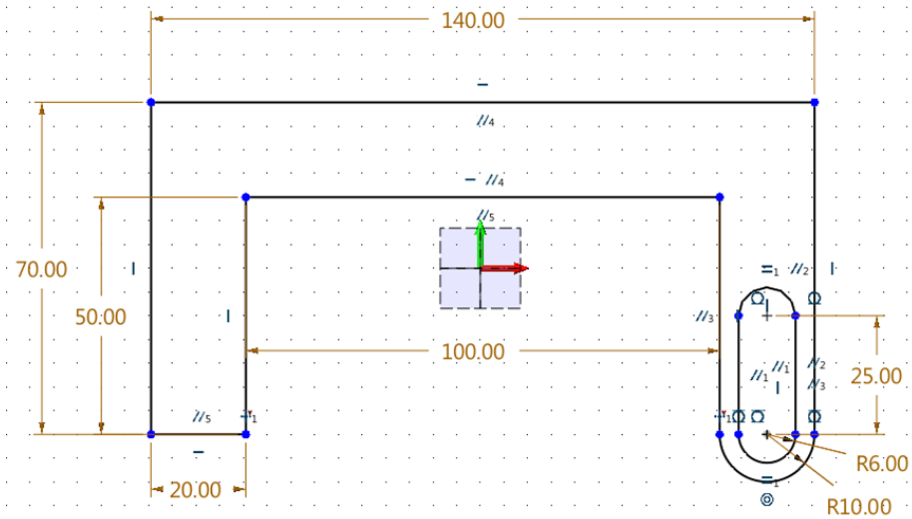

Figure 84: Sketch Example

Hint:

1. Under **Sketch**, select **Draw** to draw the following.

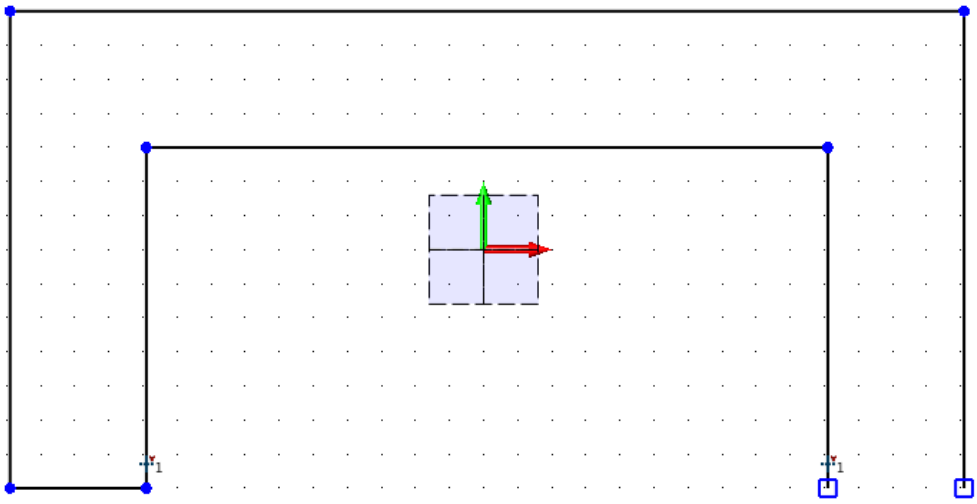

Figure 78: Draw

2. Under **Sketch**, select **Arc** and draw, followed by the **Slot.**

© Dream Technology System 2018
DTS Group Training Centres Location:
Singapore 2, Kallang Avenue #08-18 CT Hub, Singapore 339407
Johor Bahru Unit 07-04, Austin18, Jalan Austin Perdana 3, Taman Austin Perdana, 81100 Johor Bahru, Johor
Penang 1A-2-02 @ One Precinct (1337) Lengkok Mayang Pasir, 11900 Bayan Baru, Penang.
Kuala Lumpur 221, Block A, Kelana Center Point, Jalan SS7/19, 47301 Petaling Jaya, Selangor
info@dtsys.sg / info@dtsys.ny

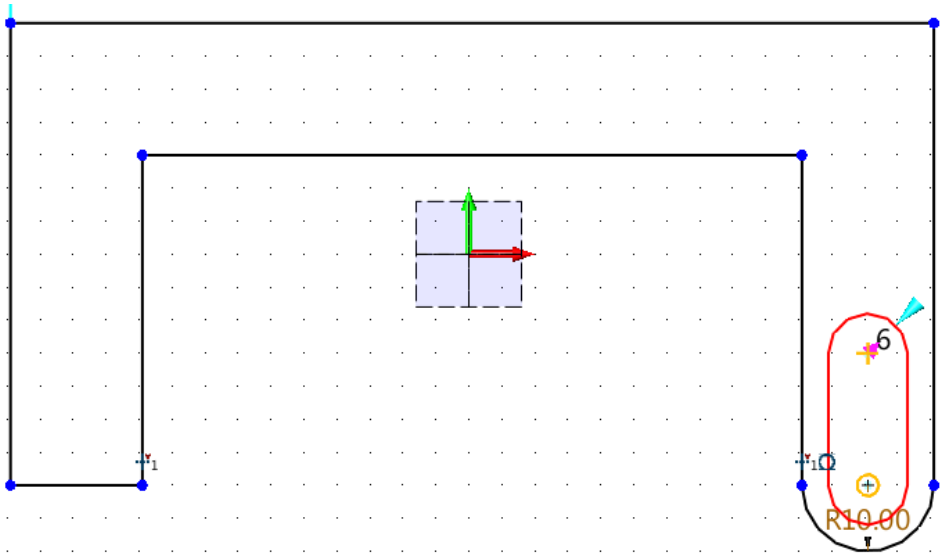

Figure 86: Arc and Slot

3. Under **Constrain,** select **Add constrain.**

   Select the lines first, then select the constrains to input.

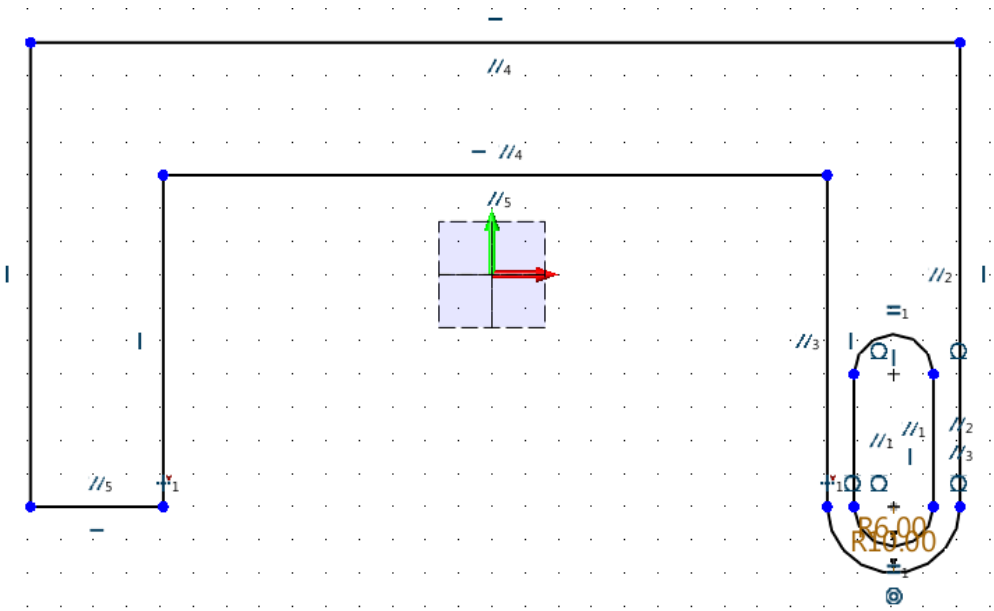

Figure 87: Add Constrains

© Dream Technology System 2018
DTS Group Training Centres Location:
Singapore 2, Kallang Avenue #08-18 CT Hub, Singapore 339407
Johor Bahru Unit 07-04, Austin18, Jalan Austin Perdana 3, Taman Austin Perdana, 81100 Johor Bahru, Johor
Penang 1A-2-02 @ One Precinct (1337) Lengkok Mayang Pasir, 11900 Bayan Baru, Penang.
Kuala Lumpur 221, Block A, Kelana Center Point, Jalan SS7/19, 47301 Petaling Jaya, Selangor
info@dtsys.sg / info@dtsys.ny

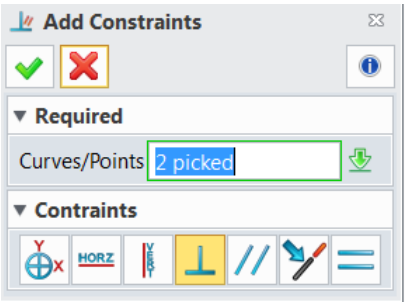

Figure 88: Select Constrains

4. Click **OK.**

5. Under **Constrains,** select **Quick Dimension.**

   Add the dimensions as follows.

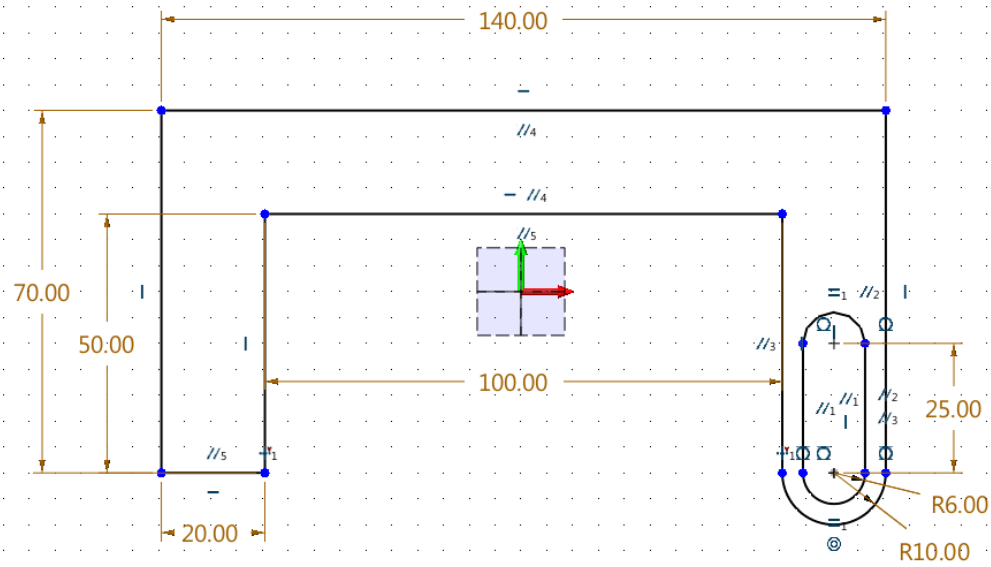

Figure 89: Add dimensions

6. **Result:** Sketch is completed.

7. Now, click the **exit icon** to exit Sketching.

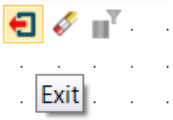

Figure 90: Exit icon

8. Proceed on to **modelling** in the next section.

© Dream Technology System 2018
DTS Group Training Centres Location:
Singapore 2, Kallang Avenue #08-18 CT Hub, Singapore 339407
Johor Bahru Unit 07-04, Austin18, Jalan Austin Perdana 3, Taman Austin Perdana, 81100 Johor Bahru, Johor
Penang 1A-2-02 @ One Precinct (1337) Lengkok Mayang Pasir, 11900 Bayan Baru, Penang.
Kuala Lumpur 221, Block A, Kelana Center Point, Jalan SS7/19, 47301 Petaling Jaya, Selangor
info@dtsys.sg / info@dtsys.ny

Note:

Here are some **common tools** that are used in Sketching:

- **Power Trim:**

1. Draw 2 **overlapping** circle as shown.

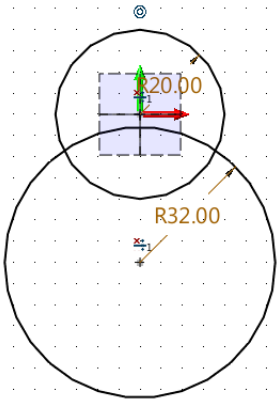

Figure 91: Overlapping circles

2. Under **Sketch**, select **Power Trim.**

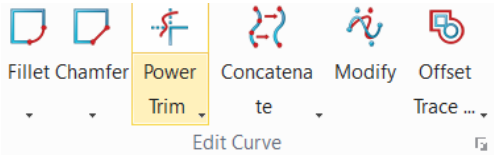

Figure 92: Power Trim icon

3. Click on **1st position** and **drag** to **2nd position.**

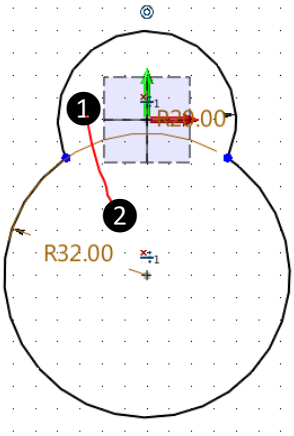

Figure 93: 1st and 2nd position

© Dream Technology System 2018
DTS Group Training Centres Location:
Singapore 2, Kallang Avenue #08-18 CT Hub, Singapore 339407
Johor Bahru Unit 07-04, Austin18, Jalan Austin Perdana 3, Taman Austin Perdana, 81100 Johor Bahru, Johor
Penang 1A-2-02 @ One Precinct (1337) Lengkok Mayang Pasir, 11900 Bayan Baru, Penang.
Kuala Lumpur 221, Block A, Kelana Center Point, Jalan SS7/19, 47301 Petaling Jaya, Selangor
info@dtsys.sg / info@dtsys.ny

4. **Result:** Center overlap is trimmed off.

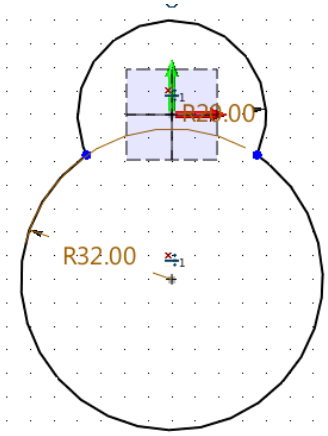

Figure 94: Power Trim Result

© Dream Technology System 2018
DTS Group Training Centres Location:
Singapore 2, Kallang Avenue #08-18 CT Hub, Singapore 339407
Johor Bahru Unit 07-04, Austin18, Jalan Austin Perdana 3, Taman Austin Perdana, 81100 Johor Bahru, Johor
Penang 1A-2-02 @ One Precinct (1337) Lengkok Mayang Pasir, 11900 Bayan Baru, Penang.
Kuala Lumpur 221, Block A, Kelana Center Point, Jalan SS7/19, 47301 Petaling Jaya, Selangor
info@dtsys.sg / info@dtsys.ny

- **Trace Profile:**

1. Draw the sketch as follows.

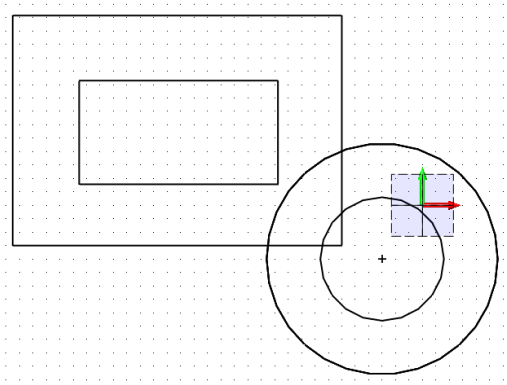

Figure 95: Sketch

2. Under Sketch, select **Trace Profile**.

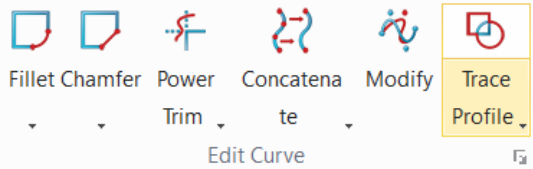

Figure 96: Trace Profile icon

3. Click on **1st position** and **2nd position**.

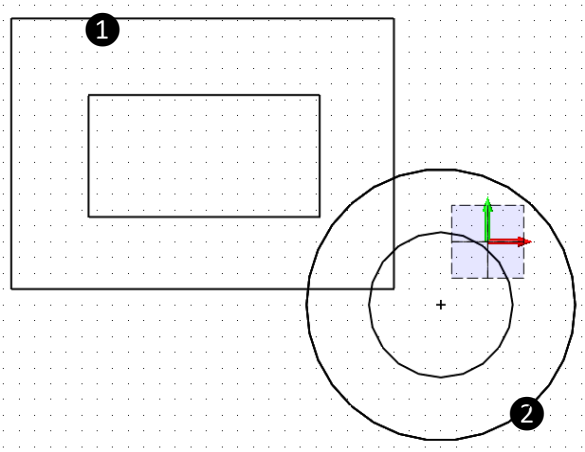

Figure 97: 1st point and 2nd point

© Dream Technology System 2018
DTS Group Training Centres Location:
Singapore 2, Kallang Avenue #08-18 CT Hub, Singapore 339407
Johor Bahru Unit 07-04, Austin18, Jalan Austin Perdana 3, Taman Austin Perdana, 81100 Johor Bahru, Johor
Penang 1A-2-02 @ One Precinct (1337) Lengkok Mayang Pasir, 11900 Bayan Baru, Penang.
Kuala Lumpur 221, Block A, Kelana Center Point, Jalan SS7/19, 47301 Petaling Jaya, Selangor
info@dtsys.sg / info@dtsys.ny

4. **Result**: Only the **perimeter of interconnecting sketch** will be selected. (Highlighted in light-blue)

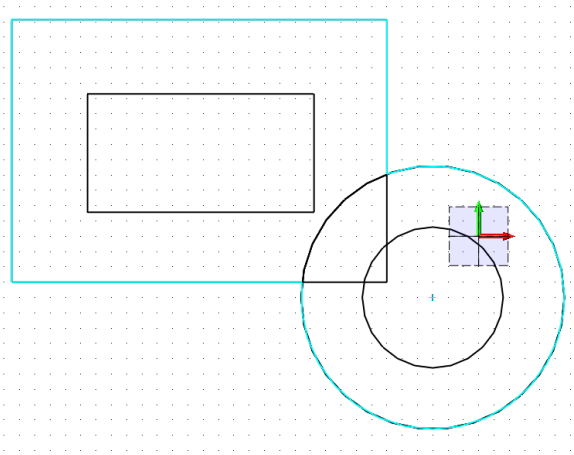

Figure 98: Trace Profile Result

© Dream Technology System 2018
DTS Group Training Centres Location:
Singapore 2, Kallang Avenue #08-18 CT Hub, Singapore 339407
Johor Bahru Unit 07-04, Austin18, Jalan Austin Perdana 3, Taman Austin Perdana, 81100 Johor Bahru, Johor
Penang 1A-2-02 @ One Precinct (1337) Lengkok Mayang Pasir, 11900 Bayan Baru, Penang.
Kuala Lumpur 221, Block A, Kelana Center Point, Jalan SS7/19, 47301 Petaling Jaya, Selangor
info@dtsys.sg / info@dtsys.ny

- **Double U Section:**

1. Under **Sketch**, select **Double U Section.**

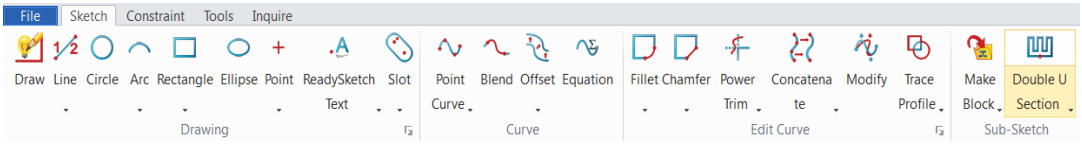

Figure 99: Double U Section icon

2. Select desired quick shape to add in sketch. This helps you create common sketch easily.

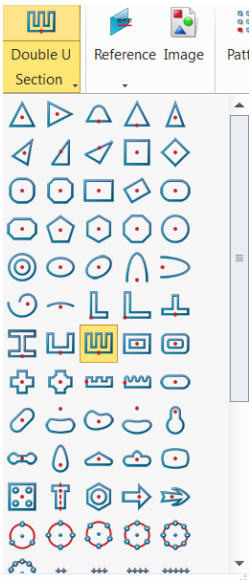

Figure 100: Common shapes

3. Click anywhere to add the desired shape.

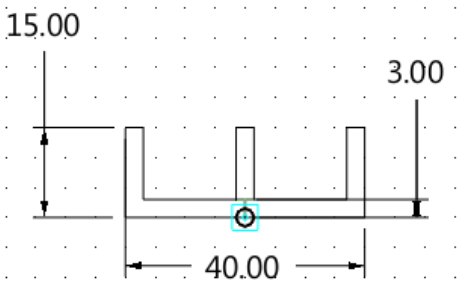

Figure 101: Quick shape is added

© Dream Technology System 2018
DTS Group Training Centres Location:
Singapore 2, Kallang Avenue #08-18 CT Hub, Singapore 339407
Johor Bahru Unit 07-04, Austin18, Jalan Austin Perdana 3, Taman Austin Perdana, 81100 Johor Bahru, Johor
Penang 1A-2-02 @ One Precinct (1337) Lengkok Mayang Pasir, 11900 Bayan Baru, Penang.
Kuala Lumpur 221, Block A, Kelana Center Point, Jalan SS7/19, 47301 Petaling Jaya, Selangor
info@dtsys.sg / info@dtsys.ny

Modelling

1. Continuing from the previous Example, Under **Shape**, select **Extrude**.

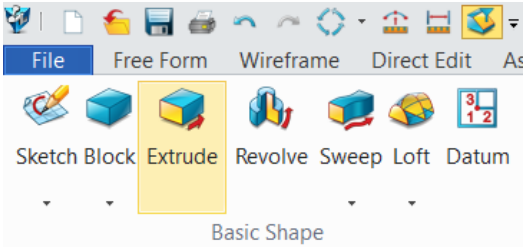

Figure 102: Extrude icon

2. Select **Profile**.

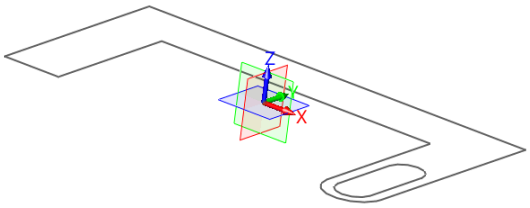

Figure 103: Select Profile

3. Select **Extrude Type.** In this case, select **1 side.**

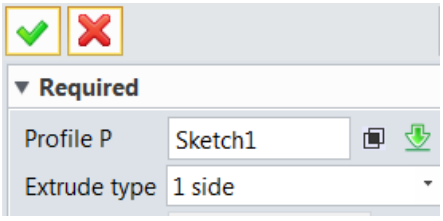

Figure 104: Select Extrude Type

4. Click anywhere in the workspace.

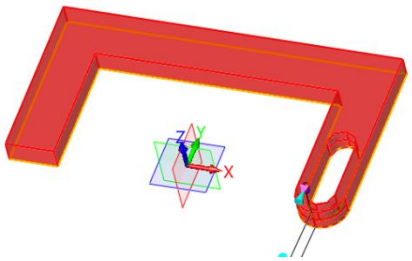

Figure 105: Extruding Profile

5. Click **OK.**

© Dream Technology System 2018
DTS Group Training Centres Location:
Singapore 2, Kallang Avenue #08-18 CT Hub, Singapore 339407
Johor Bahru Unit 07-04, Austin18, Jalan Austin Perdana 3, Taman Austin Perdana, 81100 Johor Bahru, Johor
Penang 1A-2-02 @ One Precinct (1337) Lengkok Mayang Pasir, 11900 Bayan Baru, Penang.
Kuala Lumpur 221, Block A, Kelana Center Point, Jalan SS7/19, 47301 Petaling Jaya, Selangor
info@dtsys.sg / info@dtsys.ny

6. **Right-click** on **Extrude1_Base** and select **Refine.**

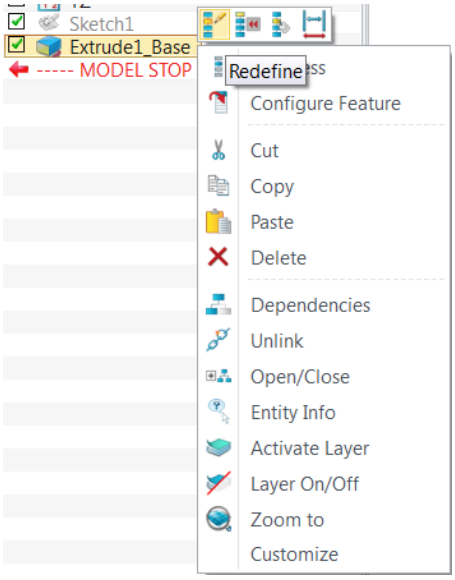

Figure 106: Redefine

7. Input a value of **End E.** In this case, we input 20.

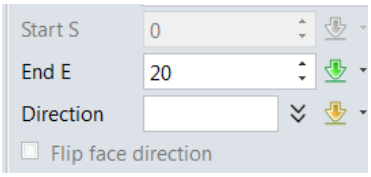

Figure 107: Input End E

8. **Result:** Model is obtained.

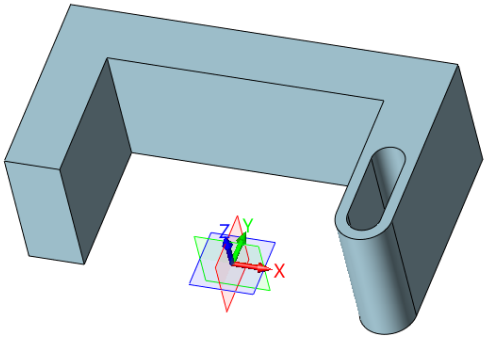

Figure 108: Model obtained

© Dream Technology System 2018
DTS Group Training Centres Location:
Singapore 2, Kallang Avenue #08-18 CT Hub, Singapore 339407
Johor Bahru Unit 07-04, Austin18, Jalan Austin Perdana 3, Taman Austin Perdana, 81100 Johor Bahru, Johor
Penang 1A-2-02 @ One Precinct (1337) Lengkok Mayang Pasir, 11900 Bayan Baru, Penang.
Kuala Lumpur 221, Block A, Kelana Center Point, Jalan SS7/19, 47301 Petaling Jaya, Selangor
info@dtsys.sg / info@dtsys.ny

9. Under **Shape,** select **Fillet.**

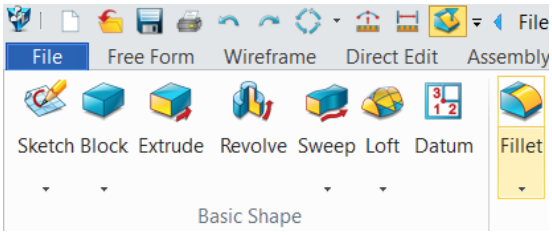

Figure 109: Fillet icon

10. Select **Fillet**.

11. Select edges to be fillet. (6 picked)

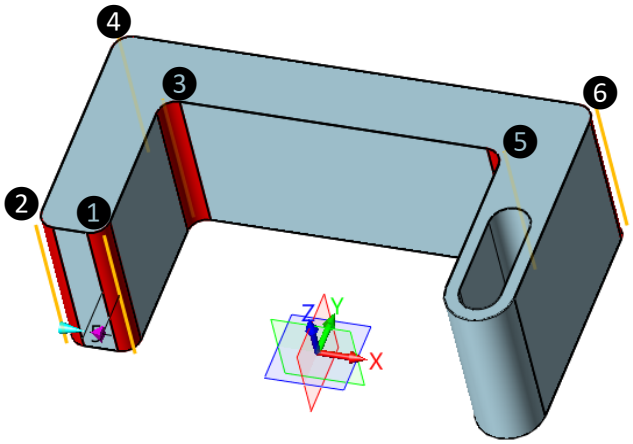

Figure 110: Location of fillet

12. Input the **Radius R.** In this case, radius is 8.

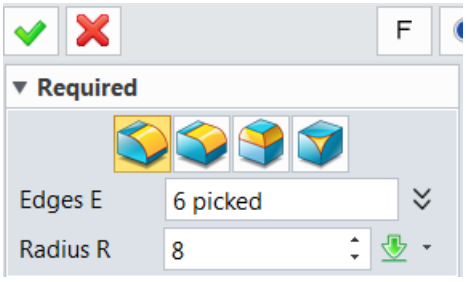

Figure 111: Input values

13. Click **OK.**

© Dream Technology System 2018
DTS Group Training Centres Location:
Singapore 2, Kallang Avenue #08-18 CT Hub, Singapore 339407
Johor Bahru Unit 07-04, Austin18, Jalan Austin Perdana 3, Taman Austin Perdana, 81100 Johor Bahru, Johor
Penang 1A-2-02 @ One Precinct (1337) Lengkok Mayang Pasir, 11900 Bayan Baru, Penang.
Kuala Lumpur 221, Block A, Kelana Center Point, Jalan SS7/19, 47301 Petaling Jaya, Selangor
info@dtsys.sg / info@dtsys.ny

14. Result: Model with fillet is obtained.

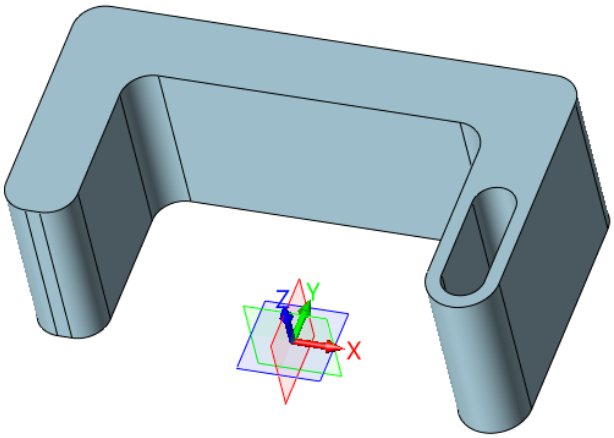

Figure 112: Model with fillet

15. Under **Shape**, select **Shell**.

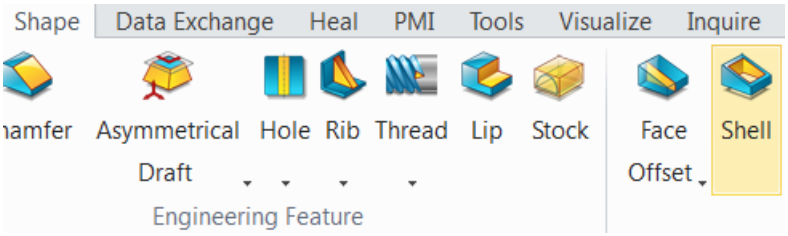

Figure 113: Shell icon

16. Select **Shape S.**

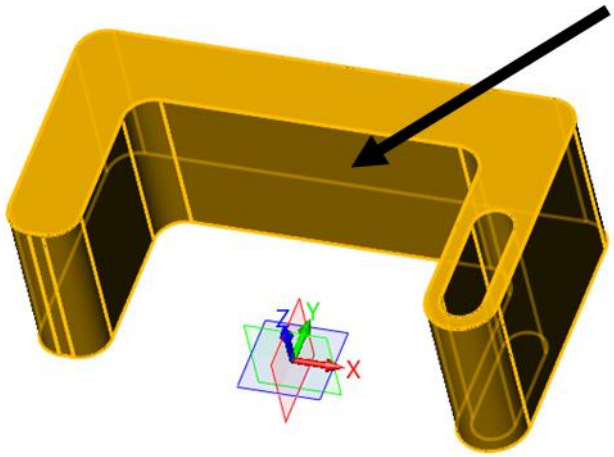

Figure 114: Shape S

© Dream Technology System 2018
DTS Group Training Centres Location:
Singapore 2, Kallang Avenue #08-18 CT Hub, Singapore 339407
Johor Bahru Unit 07-04, Austin18, Jalan Austin Perdana 3, Taman Austin Perdana, 81100 Johor Bahru, Johor
Penang 1A-2-02 @ One Precinct (1337) Lengkok Mayang Pasir, 11900 Bayan Baru, Penang.
Kuala Lumpur 221, Block A, Kelana Center Point, Jalan SS7/19, 47301 Petaling Jaya, Selangor
info@dtsys.sg / info@dtsys.ny

17. Input **Thickness T.** In this case, input 1.

18. Select **Open O.**

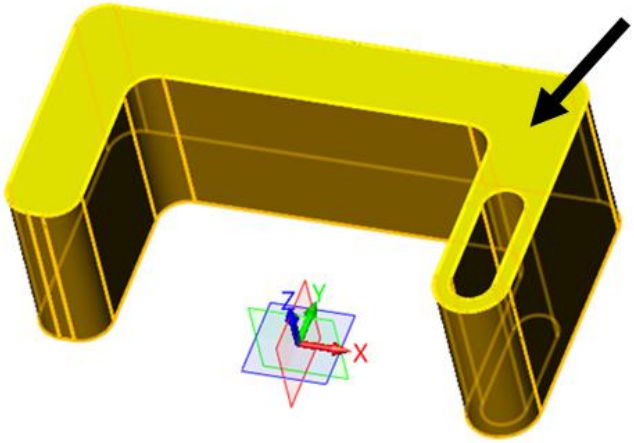

Figure 115: Open O

19. Click **OK.**

20. **Result**: Shell is obtained.

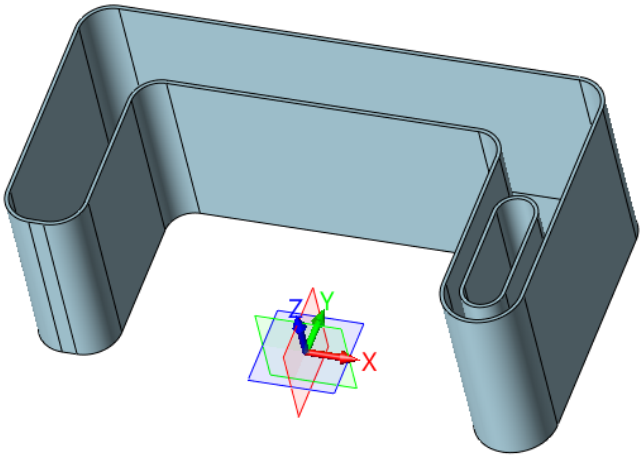

Figure116: Shell obtained

© Dream Technology System 2018
DTS Group Training Centres Location:
Singapore 2, Kallang Avenue #08-18 CT Hub, Singapore 339407
Johor Bahru Unit 07-04, Austin18, Jalan Austin Perdana 3, Taman Austin Perdana, 81100 Johor Bahru, Johor
Penang 1A-2-02 @ One Precinct (1337) Lengkok Mayang Pasir, 11900 Bayan Baru, Penang.
Kuala Lumpur 221, Block A, Kelana Center Point, Jalan SS7/19, 47301 Petaling Jaya, Selangor
info@dtsys.sg / info@dtsys.ny

Note:

Alternatively, open a **New** part. Create model using **Block**.

This will **not** require a sketch to be drawn in the first place.

Under **Shape**, select **Block**. There will be other basic shapes available such as sphere, cylinder, cone and ellipsoid.

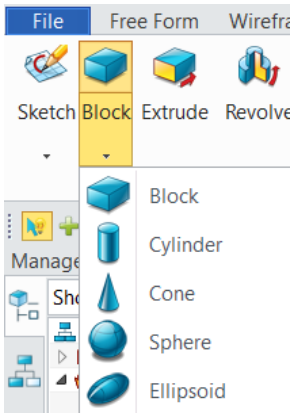

Figure 117: Basic Shapes

© Dream Technology System 2018
DTS Group Training Centres Location:
Singapore 2, Kallang Avenue #08-18 CT Hub, Singapore 339407
Johor Bahru Unit 07-04, Austin18, Jalan Austin Perdana 3, Taman Austin Perdana, 81100 Johor Bahru, Johor
Penang 1A-2-02 @ One Precinct (1337) Lengkok Mayang Pasir, 11900 Bayan Baru, Penang.
Kuala Lumpur 221, Block A, Kelana Center Point, Jalan SS7/19, 47301 Petaling Jaya, Selangor
info@dtsys.sg / info@dtsys.ny

Lesson 4: Direct Editing

Purposes

This lesson introduces how to do a direct modification on a 3D model.

Objectives

Upon completion of the lesson, you will be able to:

- Simplify a feature of the model
- Do a DE Move
- Do a DE Mirror
- Do a Replace
- Do a DE Pattern

© Dream Technology System 2018
DTS Group Training Centres Location:
Singapore 2, Kallang Avenue #08-18 CT Hub, Singapore 339407
Johor Bahru Unit 07-04, Austin18, Jalan Austin Perdana 3, Taman Austin Perdana, 81100 Johor Bahru, Johor
Penang 1A-2-02 @ One Precinct (1337) Lengkok Mayang Pasir, 11900 Bayan Baru, Penang.
Kuala Lumpur 221, Block A, Kelana Center Point, Jalan SS7/19, 47301 Petaling Jaya, Selangor
info@dtsys.sg / info@dtsys.ny

Simplify Feature

Direct Editing enables modification on features quickly and effectively on native or **imported geometry without history regeneration.**

This speed up design, saves time and increases productivity.

1. Open the part named **Direct Edit Case2 .Z3** inside **lite training** folder found on the Desktop.
2. **Double-click** to open the **part** file.

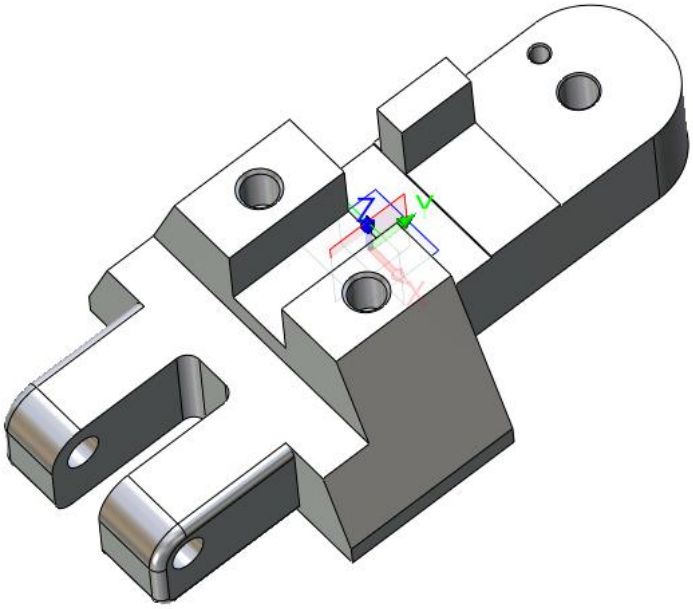

Figure 118: Direct Edit 1

3. Under **Direct Edit** ribbon tab, select **Simplify.**

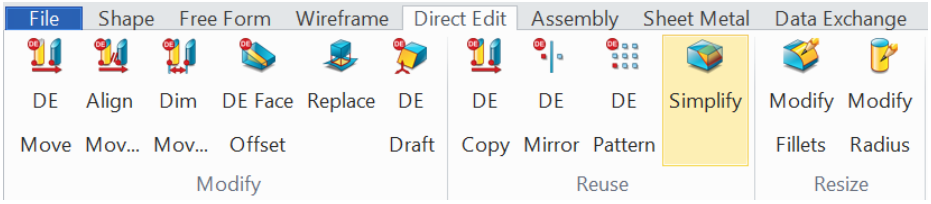

Figure 119: Simplify icon

© Dream Technology System 2018
DTS Group Training Centres Location:
Singapore 2, Kallang Avenue #08-18 CT Hub, Singapore 339407
Johor Bahru Unit 07-04, Austin18, Jalan Austin Perdana 3, Taman Austin Perdana, 81100 Johor Bahru, Johor
Penang 1A-2-02 @ One Precinct (1337) Lengkok Mayang Pasir, 11900 Bayan Baru, Penang.
Kuala Lumpur 221, Block A, Kelana Center Point, Jalan SS7/19, 47301 Petaling Jaya, Selangor
info@dtsys.sg / info@dtsys.ny

4. At the **Document Aware Toolbar**, select **Face** under the Filter List and **Pocket** under the Pick Rules List.

Figure 120: Select Face and Pocket

5. Click on one of the **pockets** in the 3D model. The whole pocket will be chosen. (3 picked)

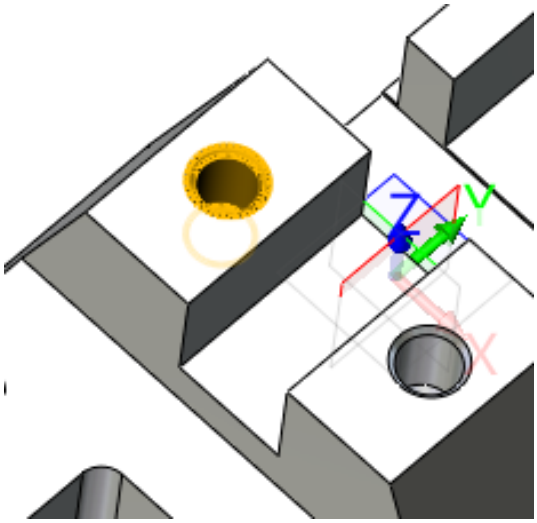

Figure 121: Select Pocket

6. Click **OK.**

© Dream Technology System 2018
DTS Group Training Centres Location:
Singapore 2, Kallang Avenue #08-18 CT Hub, Singapore 339407
Johor Bahru Unit 07-04, Austin18, Jalan Austin Perdana 3, Taman Austin Perdana, 81100 Johor Bahru, Johor
Penang 1A-2-02 @ One Precinct (1337) Lengkok Mayang Pasir, 11900 Bayan Baru, Penang.
Kuala Lumpur 221, Block A, Kelana Center Point, Jalan SS7/19, 47301 Petaling Jaya, Selangor
info@dtsys.sg / info@dtsys.ny

7. **Result:** The pocket will be completely removed. The part is simplified.

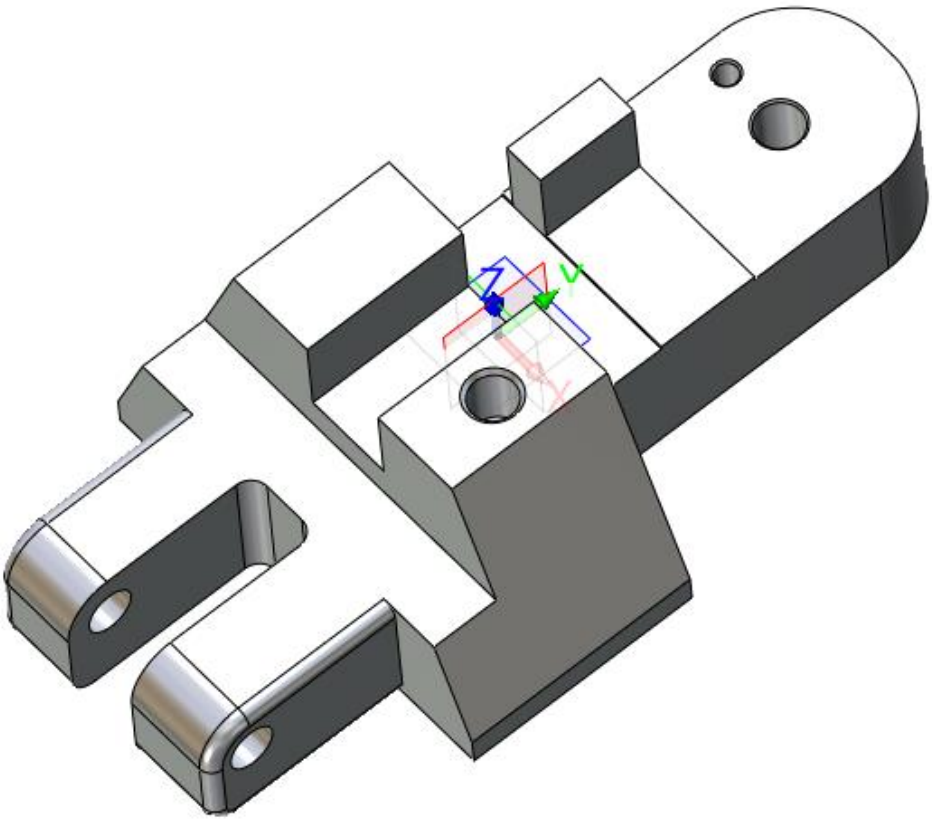

Figure 122: Simplified model

© Dream Technology System 2018
DTS Group Training Centres Location:
Singapore 2, Kallang Avenue #08-18 CT Hub, Singapore 339407
Johor Bahru Unit 07-04, Austin18, Jalan Austin Perdana 3, Taman Austin Perdana, 81100 Johor Bahru, Johor
Penang 1A-2-02 @ One Precinct (1337) Lengkok Mayang Pasir, 11900 Bayan Baru, Penang.
Kuala Lumpur 221, Block A, Kelana Center Point, Jalan SS7/19, 47301 Petaling Jaya, Selangor
info@dtsys.sg / info@dtsys.ny

DE Mirror

Direct Editing enables modification on **by Mirror (moving or copy the original face)** of imported geometry **without history regeneration.**

1. Under **Direct Edit** ribbon tab, select **DE Mirror.**

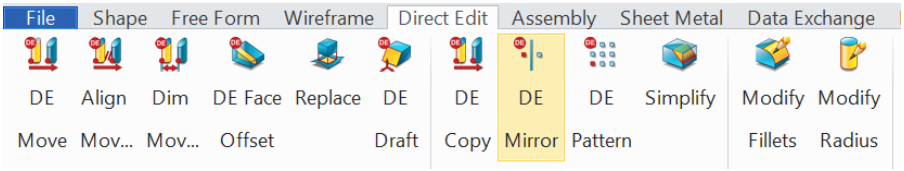

Figure 123: DE Mirror icon

2. Select the **Faces** of the block (6 picked).

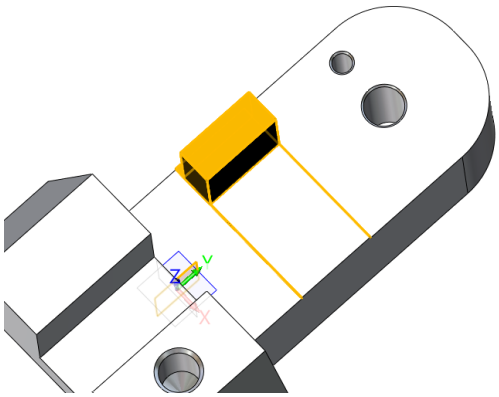

Figure 124: Select Faces

3. Select the **YZ plane** and click **copy.**

© Dream Technology System 2018
DTS Group Training Centres Location:
Singapore 2, Kallang Avenue #08-18 CT Hub, Singapore 339407
Johor Bahru Unit 07-04, Austin18, Jalan Austin Perdana 3, Taman Austin Perdana, 81100 Johor Bahru, Johor
Penang 1A-2-02 @ One Precinct (1337) Lengkok Mayang Pasir, 11900 Bayan Baru, Penang.
Kuala Lumpur 221, Block A, Kelana Center Point, Jalan SS7/19, 47301 Petaling Jaya, Selangor
info@dtsys.sg / info@dtsys.ny

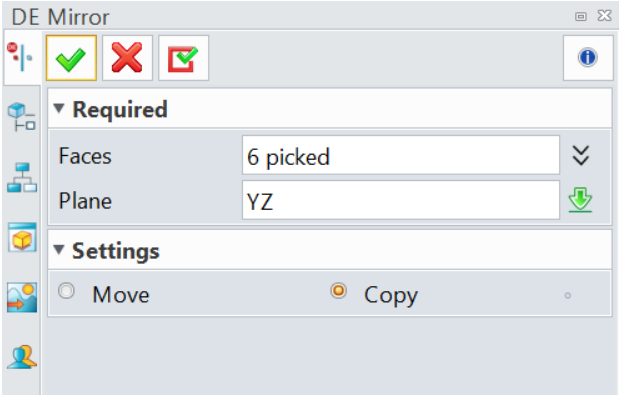

Figure 125: Select Plane and click copy

4. Click **OK**
5. **Result:** the block will be mirror.

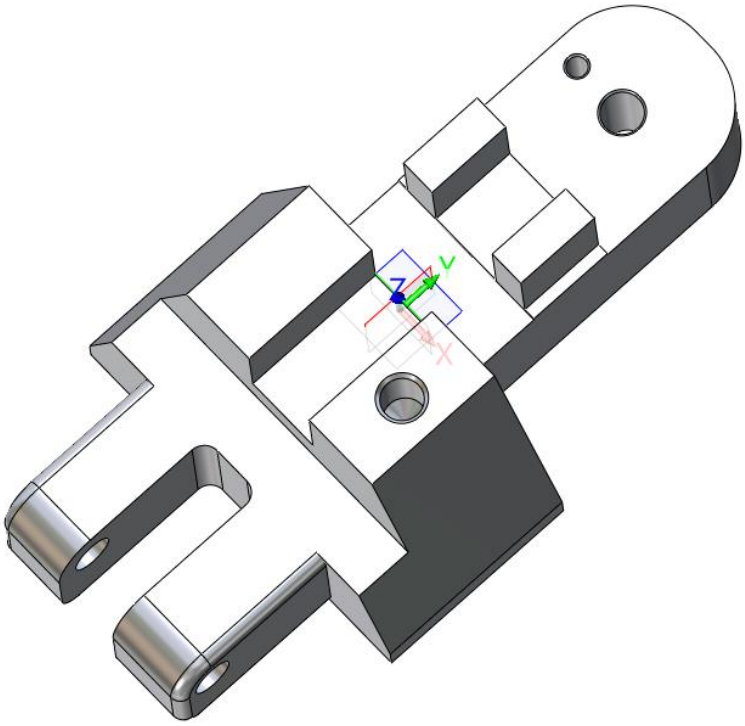

Figure 7926: Results of DE Mirror

© Dream Technology System 2018
DTS Group Training Centres Location:
Singapore 2, Kallang Avenue #08-18 CT Hub, Singapore 339407
Johor Bahru Unit 07-04, Austin18, Jalan Austin Perdana 3, Taman Austin Perdana, 81100 Johor Bahru, Johor
Penang 1A-2-02 @ One Precinct (1337) Lengkok Mayang Pasir, 11900 Bayan Baru, Penang.
Kuala Lumpur 221, Block A, Kelana Center Point, Jalan SS7/19, 47301 Petaling Jaya, Selangor
info@dtsys.sg / info@dtsys.ny

DE Move

Direct Editing enables modification on **by moving features** of imported geometry **without history regeneration.**

1. Under **Direct Edit** ribbon tab, select **DE Move.**

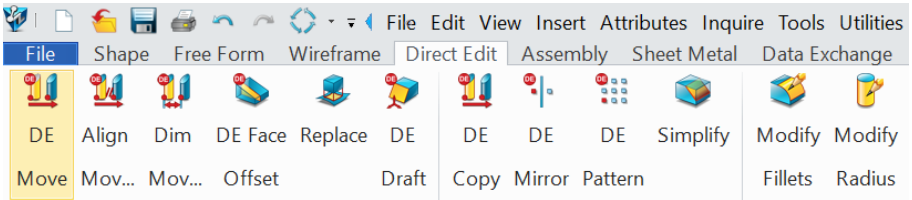

Figure 135: Select DE Move icon

2. At the **Document Aware Toolbar**, select **Face** under the Filter List and **Pocket** under the Pick Rules List.
3. **Select DE Move Type. In this case, we select Dynamic move entities.**

Dynamic move entities

Move entities from point to point

Move entities along a direction

Rotate entities around a direction

Move entities by aligning frame

Move entities along curve

© Dream Technology System 2018
DTS Group Training Centres Location:
Singapore 2, Kallang Avenue #08-18 CT Hub, Singapore 339407
Johor Bahru Unit 07-04, Austin18, Jalan Austin Perdana 3, Taman Austin Perdana, 81100 Johor Bahru, Johor
Penang 1A-2-02 @ One Precinct (1337) Lengkok Mayang Pasir, 11900 Bayan Baru, Penang.
Kuala Lumpur 221, Block A, Kelana Center Point, Jalan SS7/19, 47301 Petaling Jaya, Selangor
info@dtsys.sg / info@dtsys.ny

4. Select **Faces** of the hole (1 picked)

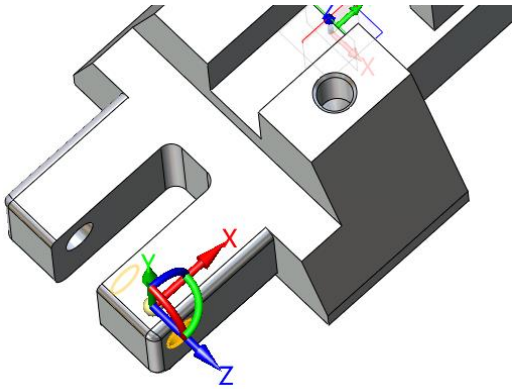

Figure 136: Select Faces

5. Move the select **Faces** on **X Axis**
6. Input the **Range** as 10.

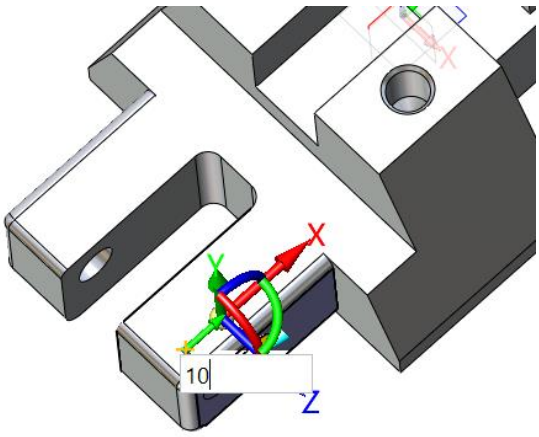

Figure 137: Input Direction and Range

7. Click **OK.**
8. **Result:** The pocket will be moved 10mm

© Dream Technology System 2018
DTS Group Training Centres Location:
Singapore 2, Kallang Avenue #08-18 CT Hub, Singapore 339407
Johor Bahru Unit 07-04, Austin18, Jalan Austin Perdana 3, Taman Austin Perdana, 81100 Johor Bahru, Johor
Penang 1A-2-02 @ One Precinct (1337) Lengkok Mayang Pasir, 11900 Bayan Baru, Penang.
Kuala Lumpur 221, Block A, Kelana Center Point, Jalan SS7/19, 47301 Petaling Jaya, Selangor
info@dtsys.sg / info@dtsys.ny

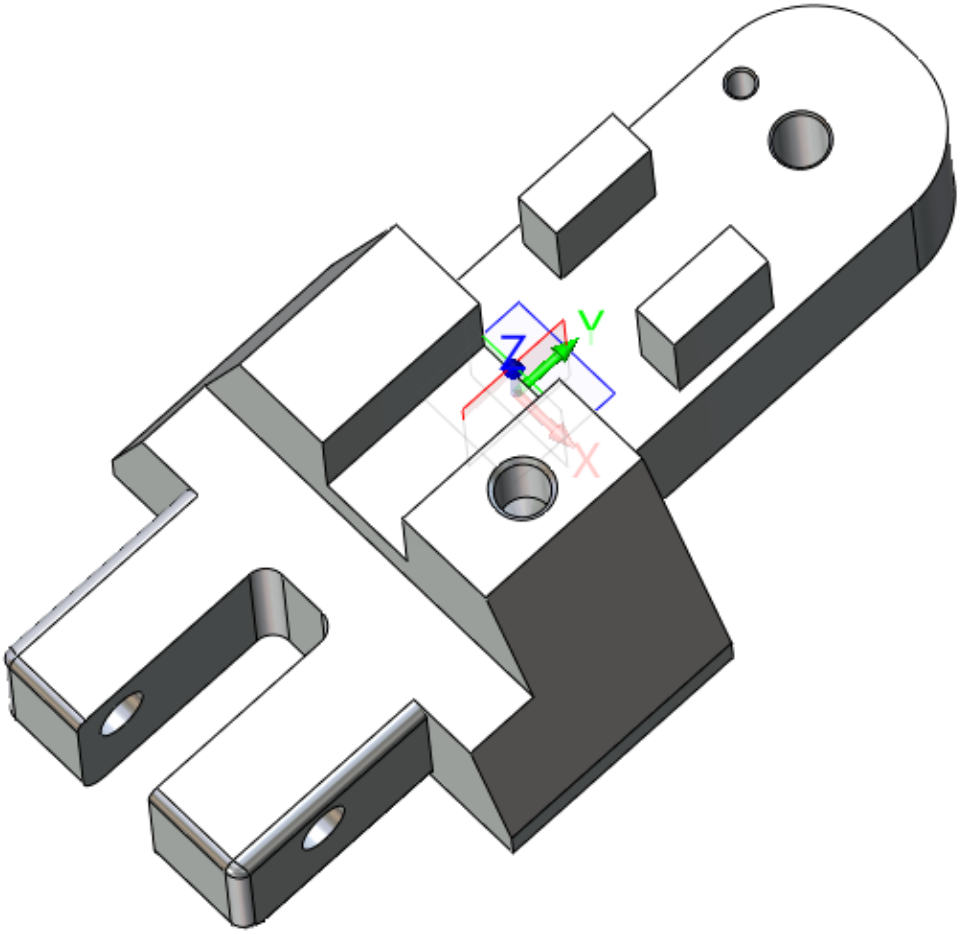

Figure 138: Result of DE Move

© Dream Technology System 2018
DTS Group Training Centres Location:
Singapore 2, Kallang Avenue #08-18 CT Hub, Singapore 339407
Johor Bahru Unit 07-04, Austin18, Jalan Austin Perdana 3, Taman Austin Perdana, 81100 Johor Bahru, Johor
Penang 1A-2-02 @ One Precinct (1337) Lengkok Mayang Pasir, 11900 Bayan Baru, Penang.
Kuala Lumpur 221, Block A, Kelana Center Point, Jalan SS7/19, 47301 Petaling Jaya, Selangor
info@dtsys.sg / info@dtsys.ny

DE Pattern

Direct Editing enables modification on **patterns** of imported geometry **without history regeneration.**

1. Under **Direct Edit** ribbon tab, select **DE Pattern.**

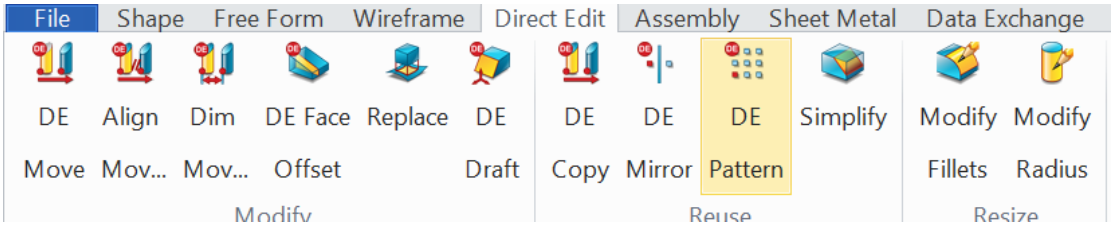

Figure 139: DE Pattern icon

2. At the **Document Aware Toolbar**, select **Face** under the Filter List and **Pocket** under the Pick Rules List.

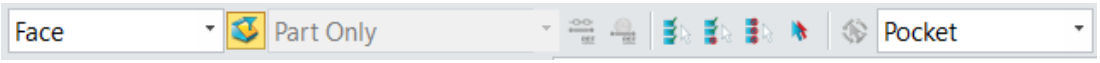

Figure 140: Select Face and Pocket

3. Select **DE Pattern Type**. In this case, we select **Circular**.

Linear

Circular

Point to point

At pattern

At curves

At face

© Dream Technology System 2018
DTS Group Training Centres Location:
Singapore 2, Kallang Avenue #08-18 CT Hub, Singapore 339407
Johor Bahru Unit 07-04, Austin18, Jalan Austin Perdana 3, Taman Austin Perdana, 81100 Johor Bahru, Johor
Penang 1A-2-02 @ One Precinct (1337) Lengkok Mayang Pasir, 11900 Bayan Baru, Penang.
Kuala Lumpur 221, Block A, Kelana Center Point, Jalan SS7/19, 47301 Petaling Jaya, Selangor
info@dtsys.sg / info@dtsys.ny

4. Select **Base**, which includes both the **pocket** and the **chamfer**. (3 picked)

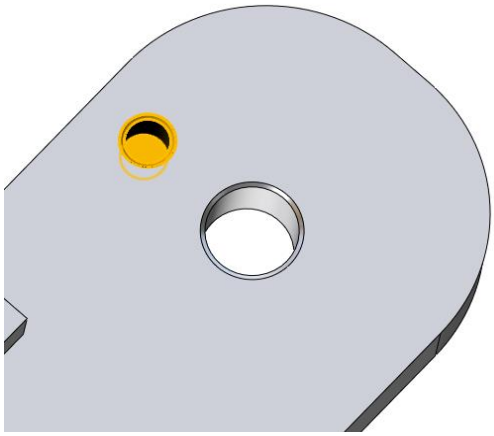

Figure 141: Select Pocket

5. Input the **Direction as 0-,0,1**. Alternatively, click the button and input XYZ direction.

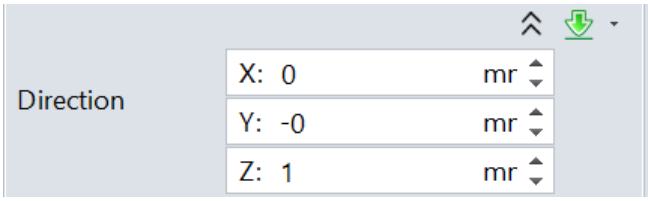

Figure 142: Input Direction Method

6. Input the **Number** of patterns as 6.
7. Input **Angle** as 60.

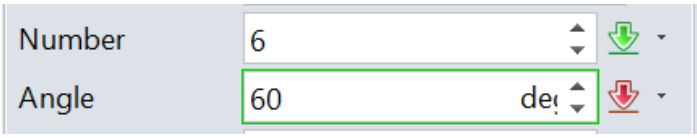

Figure 145: Input Number and angle

© Dream Technology System 2018
DTS Group Training Centres Location:
Singapore 2, Kallang Avenue #08-18 CT Hub, Singapore 339407
Johor Bahru Unit 07-04, Austin18, Jalan Austin Perdana 3, Taman Austin Perdana, 81100 Johor Bahru, Johor
Penang 1A-2-02 @ One Precinct (1337) Lengkok Mayang Pasir, 11900 Bayan Baru, Penang.
Kuala Lumpur 221, Block A, Kelana Center Point, Jalan SS7/19, 47301 Petaling Jaya, Selangor
info@dtsys.sg / info@dtsys.ny

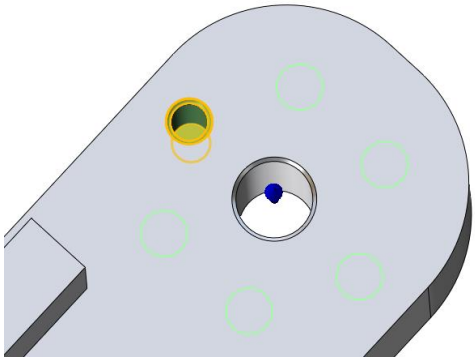

Figure 146: Before click OK

8. Click **OK.**
9. **Result:** The 6 pocket will be equally spaced out at 60 degrees apart.

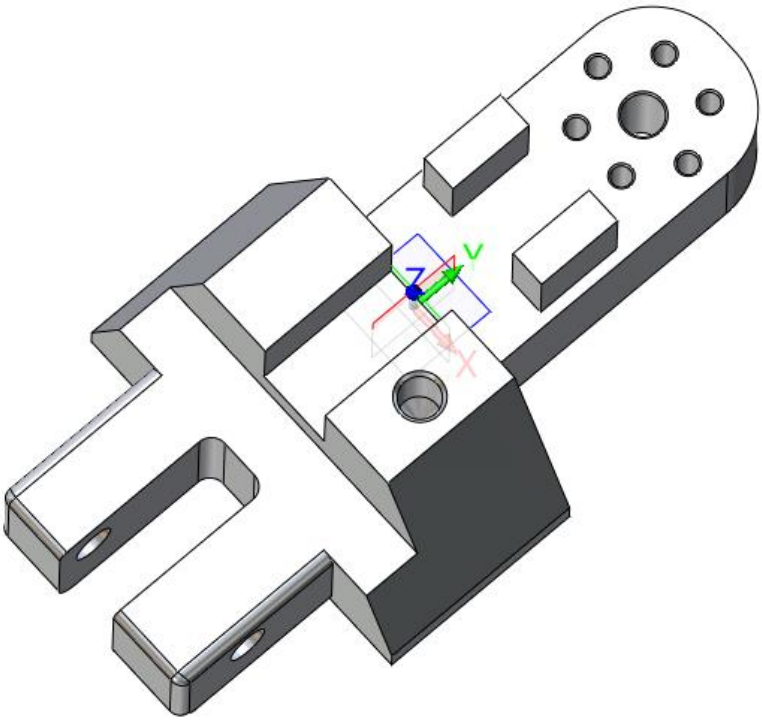

Figure 147: Result of DE Pattern

© Dream Technology System 2018
DTS Group Training Centres Location:
Singapore 2, Kallang Avenue #08-18 CT Hub, Singapore 339407
Johor Bahru Unit 07-04, Austin18, Jalan Austin Perdana 3, Taman Austin Perdana, 81100 Johor Bahru, Johor
Penang 1A-2-02 @ One Precinct (1337) Lengkok Mayang Pasir, 11900 Bayan Baru, Penang.
Kuala Lumpur 221, Block A, Kelana Center Point, Jalan SS7/19, 47301 Petaling Jaya, Selangor
info@dtsys.sg / info@dtsys.ny

Lesson 5: Creating a 2D Drawing

Purposes

This lesson introduces the different view that can be created in a 2D Drawing

Objectives

Upon completion of the lesson, you will be able to:

- Create a 2D Drawing
- Create Layout View
- Create Base view
- Create Projection view
- Add Assigned View
- Create ISO view
- Create Section View
- Dimensions in 2D Drawings
- BOM Table
- Adding Annotations

© Dream Technology System 2018
DTS Group Training Centres Location:
Singapore 2, Kallang Avenue #08-18 CT Hub, Singapore 339407
Johor Bahru Unit 07-04, Austin18, Jalan Austin Perdana 3, Taman Austin Perdana, 81100 Johor Bahru, Johor
Penang 1A-2-02 @ One Precinct (1337) Lengkok Mayang Pasir, 11900 Bayan Baru, Penang.
Kuala Lumpur 221, Block A, Kelana Center Point, Jalan SS7/19, 47301 Petaling Jaya, Selangor
info@dtsys.sg / info@dtsys.ny

Toggling to 2D Environment

This section teaches how to create 2D views with dimensions. Dimensions can also be obtained by inherited PMI.

1. Open the part named **2D Drawing.Z3** inside **lite training** folder found on the Desktop.

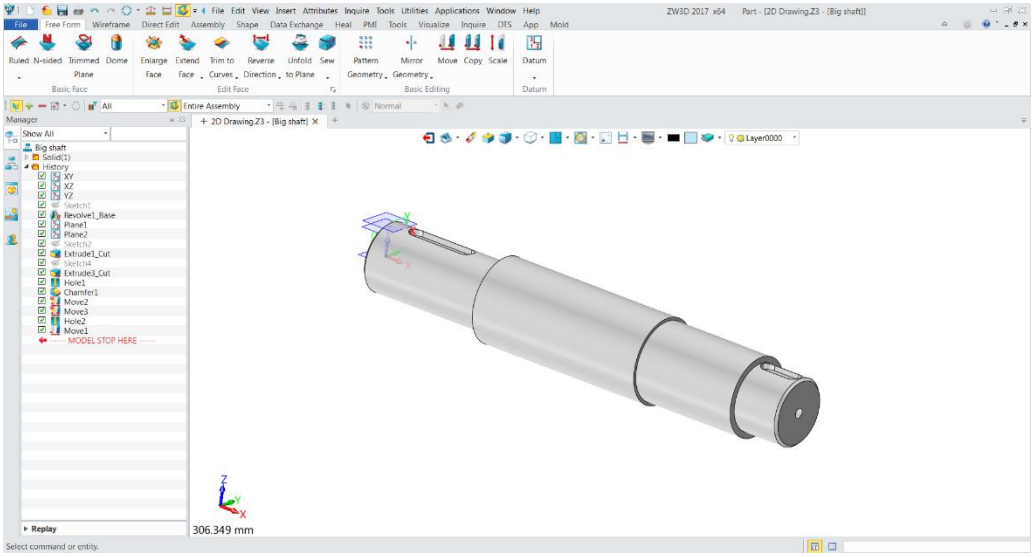

Figure 148: Big Shaft

2. Click on the icon below and select **2D Sheet** to get into the 2D environment.

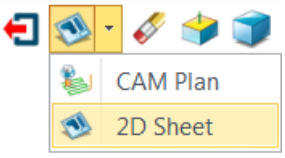

Figure 149: 2D Sheet icon

© Dream Technology System 2018
DTS Group Training Centres Location:
Singapore 2, Kallang Avenue #08-18 CT Hub, Singapore 339407
Johor Bahru Unit 07-04, Austin18, Jalan Austin Perdana 3, Taman Austin Perdana, 81100 Johor Bahru, Johor
Penang 1A-2-02 @ One Precinct (1337) Lengkok Mayang Pasir, 11900 Bayan Baru, Penang.
Kuala Lumpur 221, Block A, Kelana Center Point, Jalan SS7/19, 47301 Petaling Jaya, Selangor
info@dtsys.sg / info@dtsys.ny

3. Alternatively, **Right-click** and select 2D Sheet.

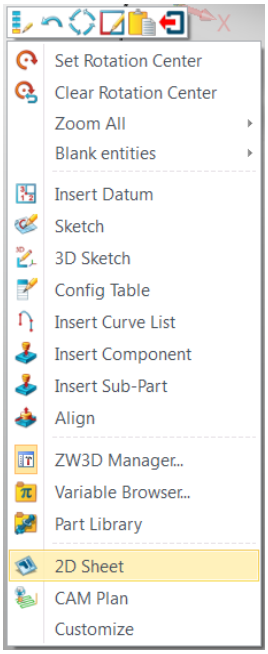

Figure 150: 2D sheet alternative

4. **Result:** 2D Drawing is shown.

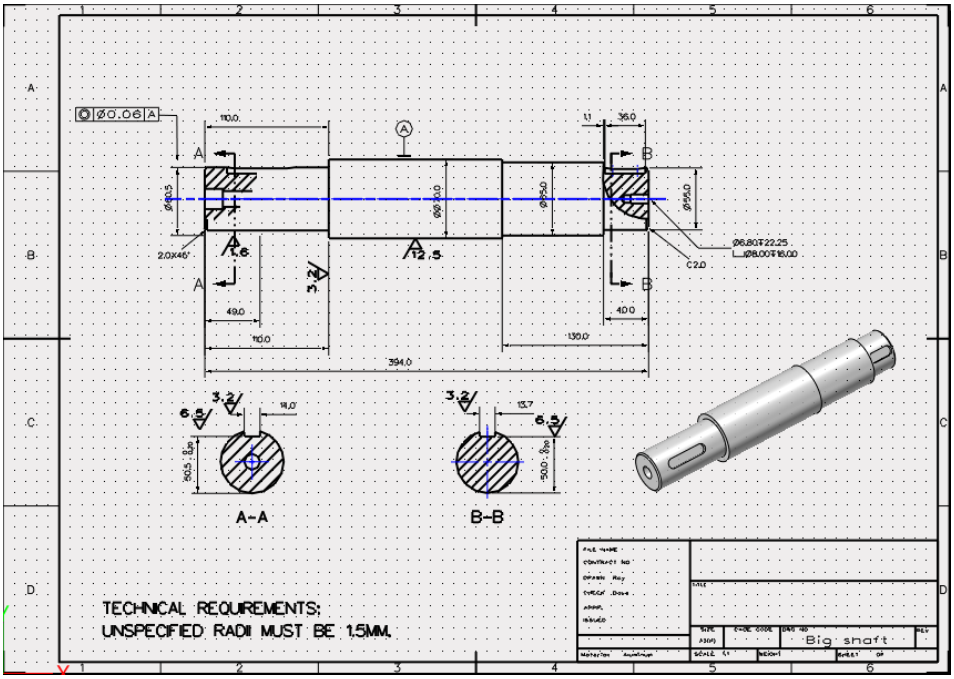

Figure 151: 2D Drawing shown

© Dream Technology System 2018
DTS Group Training Centres Location:
Singapore 2, Kallang Avenue #08-18 CT Hub, Singapore 339407
Johor Bahru Unit 07-04, Austin18, Jalan Austin Perdana 3, Taman Austin Perdana, 81100 Johor Bahru, Johor
Penang 1A-2-02 @ One Precinct (1337) Lengkok Mayang Pasir, 11900 Bayan Baru, Penang.
Kuala Lumpur 221, Block A, Kelana Center Point, Jalan SS7/19, 47301 Petaling Jaya, Selangor
info@dtsys.sg / info@dtsys.my

Creating Layout View

1. Open the part named **Modeling Case.Z3** inside **lite training** folder found on the Desktop.

2. Click on the **2D sheet** icon.

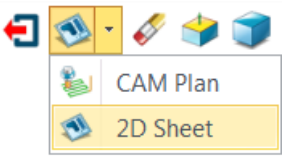

Figure 152: 2D Sheet icon

3. Select a **template.** In this case, we select **A3_H(ANSI).**

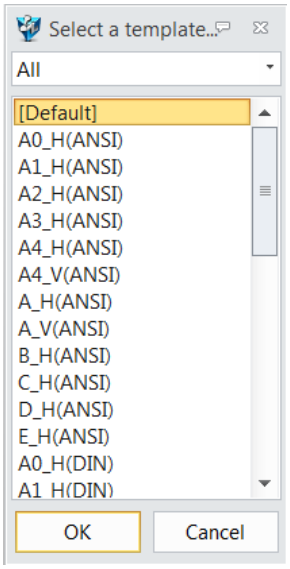

Figure 153: Templates

4. Click **OK.**

5. Under the **Layout** ribbon tab, select **Layout**.

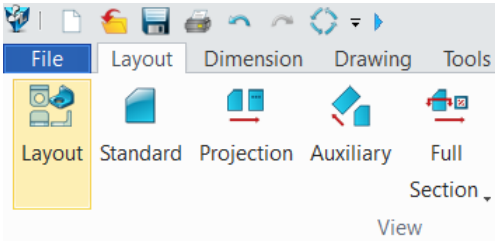

Figure 154: Layout icon

© Dream Technology System 2018
DTS Group Training Centres Location:
Singapore 2, Kallang Avenue #08-18 CT Hub, Singapore 339407
Johor Bahru Unit 07-04, Austin18, Jalan Austin Perdana 3, Taman Austin Perdana, 81100 Johor Bahru, Johor
Penang 1A-2-02 @ One Precinct (1337) Lengkok Mayang Pasir, 11900 Bayan Baru, Penang.
Kuala Lumpur 221, Block A, Kelana Center Point, Jalan SS7/19, 47301 Petaling Jaya, Selangor
info@dtsys.sg / info@dtsys.ny

6. **Select ISO view under Layout.**

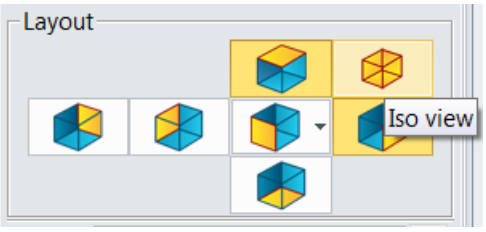

Figure 155: ISO View icon

7. Click **OK.**

8. **Result:** 2D Drawing obtained.

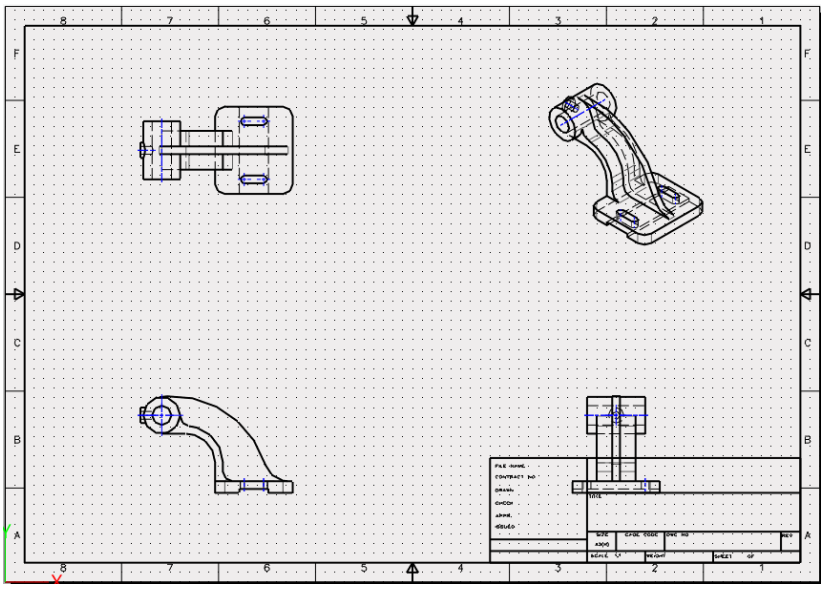

Figure 156: 2D Drawing

© Dream Technology System 2018
DTS Group Training Centres Location:
Singapore 2, Kallang Avenue #08-18 CT Hub, Singapore 339407
Johor Bahru Unit 07-04, Austin18, Jalan Austin Perdana 3, Taman Austin Perdana, 81100 Johor Bahru, Johor
Penang 1A-2-02 @ One Precinct (1337) Lengkok Mayang Pasir, 11900 Bayan Baru, Penang.
Kuala Lumpur 221, Block A, Kelana Center Point, Jalan SS7/19, 47301 Petaling Jaya, Selangor
info@dtsys.sg / info@dtsys.ny

9. **Double-click** on any views to change its details (See Note 3). In this case, select **Shaded** for the following View.

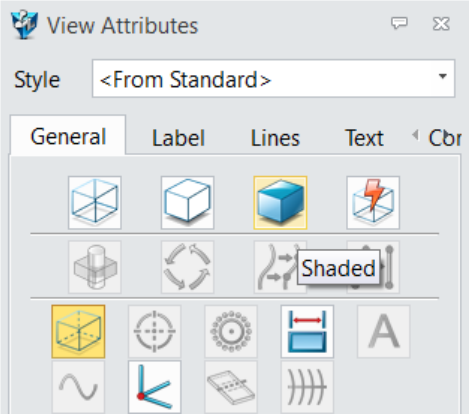

Figure 157: Select Shaded

10. **Result:** View becomes Shaded.

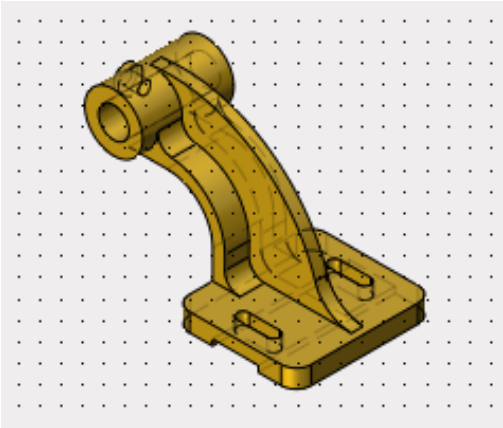

Figure 158: Shaded View

© Dream Technology System 2018
DTS Group Training Centres Location:
Singapore 2, Kallang Avenue #08-18 CT Hub, Singapore 339407
Johor Bahru Unit 07-04, Austin18, Jalan Austin Perdana 3, Taman Austin Perdana, 81100 Johor Bahru, Johor
Penang 1A-2-02 @ One Precinct (1337) Lengkok Mayang Pasir, 11900 Bayan Baru, Penang.
Kuala Lumpur 221, Block A, Kelana Center Point, Jalan SS7/19, 47301 Petaling Jaya, Selangor
info@dtsys.sg / info@dtsys.ny

Note 1:

To change view position:

The view obtained at the bottom right is blocked by the template. Hence, it is necessary to shift the views above the template.

1. Click on the **1st point** and drag to the **2nd point**. Then release the mouse.

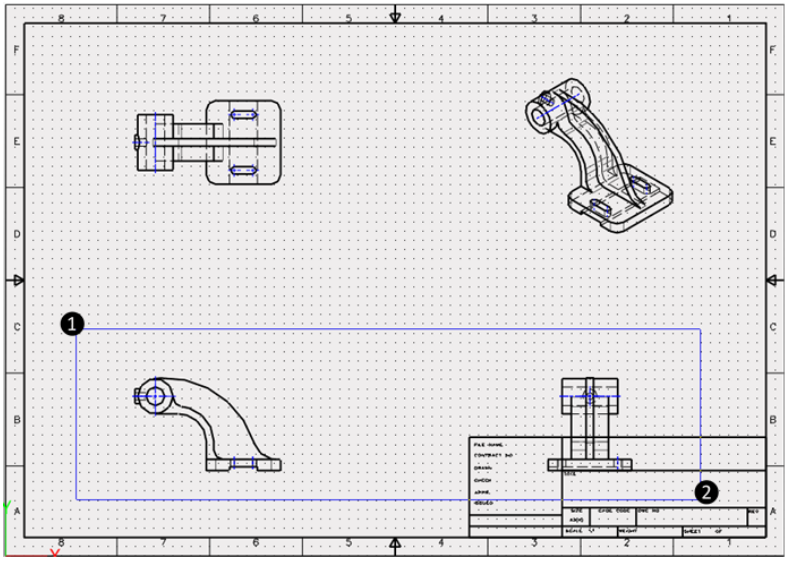

Figure 159: Step 1

2. The bottom two views will be **highlighted**, indicated in **orange dotted lines.**

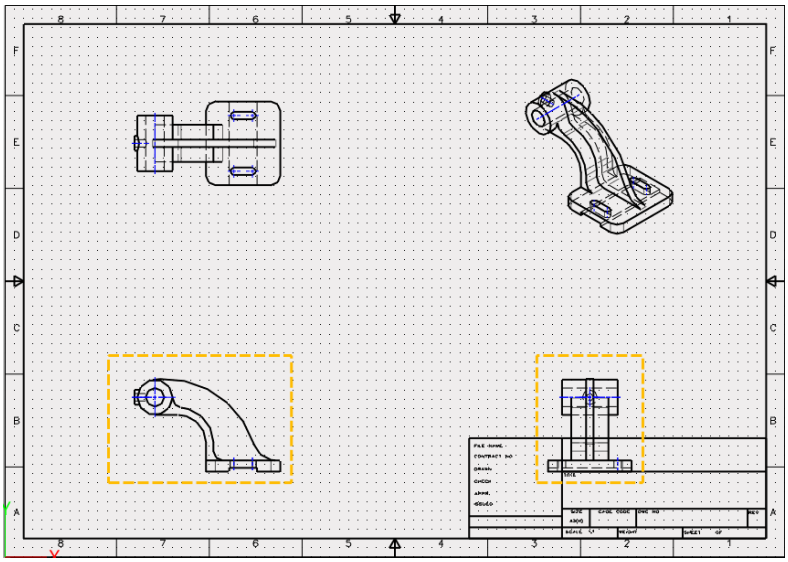

Figure 160: Step 2

© Dream Technology System 2018
DTS Group Training Centres Location:
Singapore 2, Kallang Avenue #08-18 CT Hub, Singapore 339407
Johor Bahru Unit 07-04, Austin18, Jalan Austin Perdana 3, Taman Austin Perdana, 81100 Johor Bahru, Johor
Penang 1A-2-02 @ One Precinct (1337) Lengkok Mayang Pasir, 11900 Bayan Baru, Penang.
Kuala Lumpur 221, Block A, Kelana Center Point, Jalan SS7/19, 47301 Petaling Jaya, Selangor
info@dtsys.sg / info@dtsys.ny

3. Click on the **3rd point** (on the orange dotted line) and drag upwards to the **4th point**. Then release the mouse.

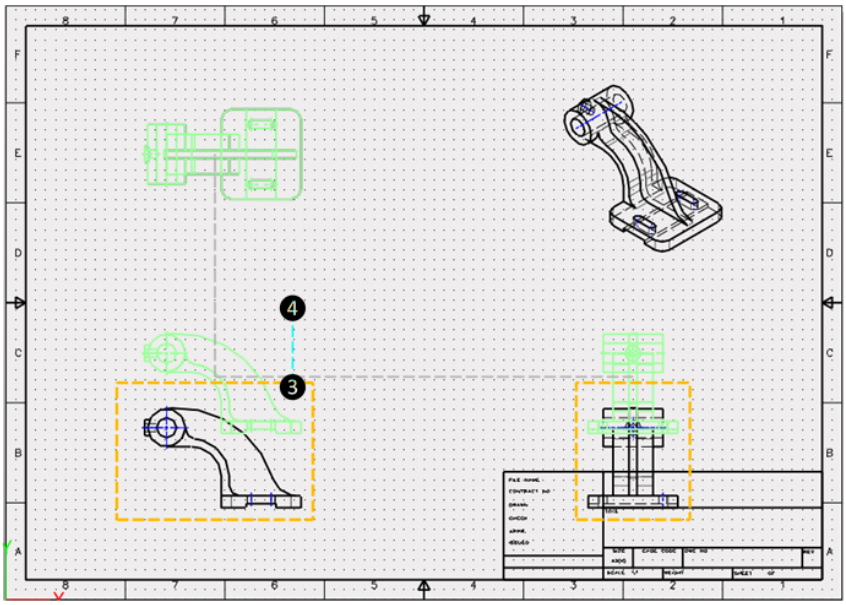

Figure 161: Step 3

4. **Result:** The bottom views are shifted upwards.

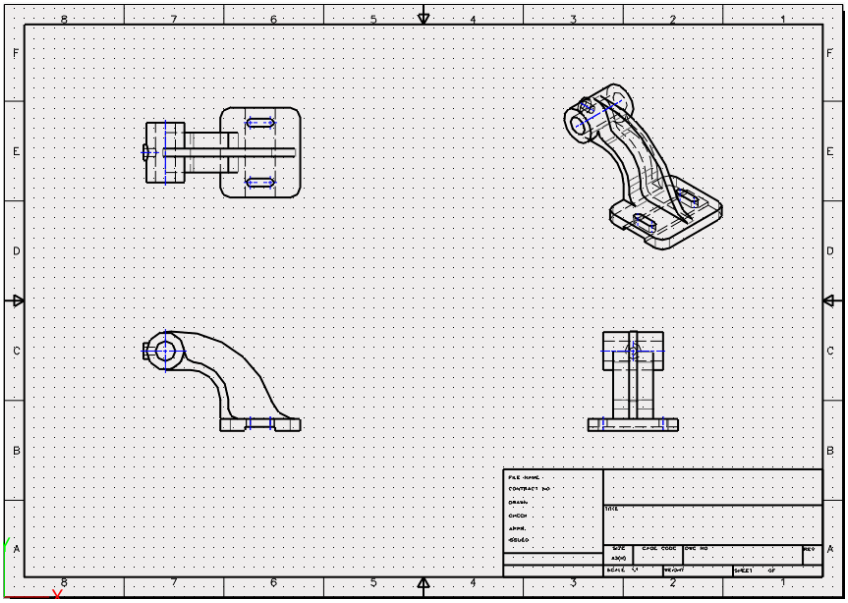

Figure 162: Step 4

© Dream Technology System 2018
DTS Group Training Centres Location:
Singapore 2, Kallang Avenue #08-18 CT Hub, Singapore 339407
Johor Bahru Unit 07-04, Austin18, Jalan Austin Perdana 3, Taman Austin Perdana, 81100 Johor Bahru, Johor
Penang 1A-2-02 @ One Precinct (1337) Lengkok Mayang Pasir, 11900 Bayan Baru, Penang.
Kuala Lumpur 221, Block A, Kelana Center Point, Jalan SS7/19, 47301 Petaling Jaya, Selangor
info@dtsys.sg / info@dtsys.ny

Note 2:

To change line colour:

The **light green colour** of the display of the echo drawing might be hard to see.

Following are the steps to change the display colour:

1. Click on the **Settings icon** on the top-right of the screen.
2. Select **Color.**

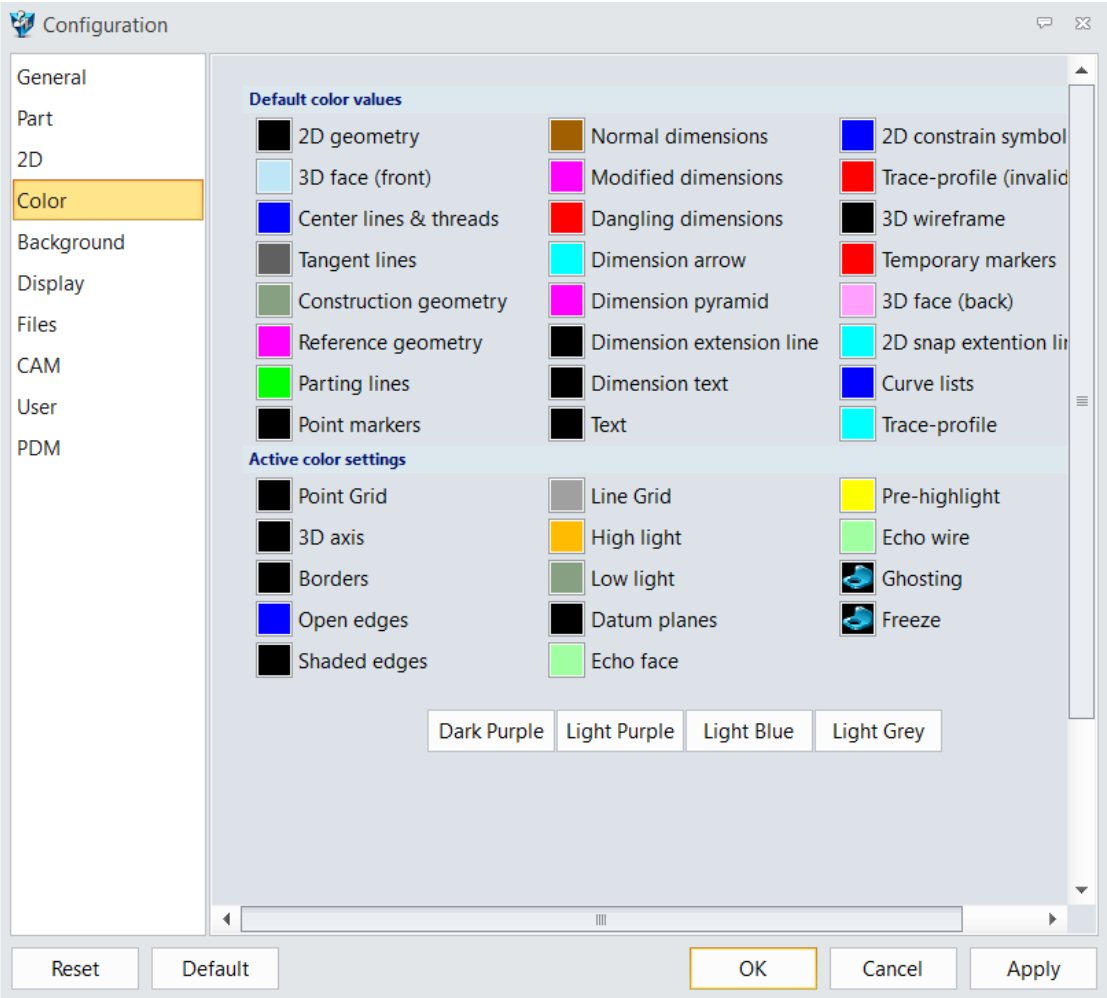

Figure 163: Select Color

© Dream Technology System 2018
DTS Group Training Centres Location:
Singapore 2, Kallang Avenue #08-18 CT Hub, Singapore 339407
Johor Bahru Unit 07-04, Austin18, Jalan Austin Perdana 3, Taman Austin Perdana, 81100 Johor Bahru, Johor
Penang 1A-2-02 @ One Precinct (1337) Lengkok Mayang Pasir, 11900 Bayan Baru, Penang.
Kuala Lumpur 221, Block A, Kelana Center Point, Jalan SS7/19, 47301 Petaling Jaya, Selangor
info@dtsys.sg / info@dtsys.ny

3. Under **Active color settings**, change the colour for **Echo wire** and **Echo face** to **red.**

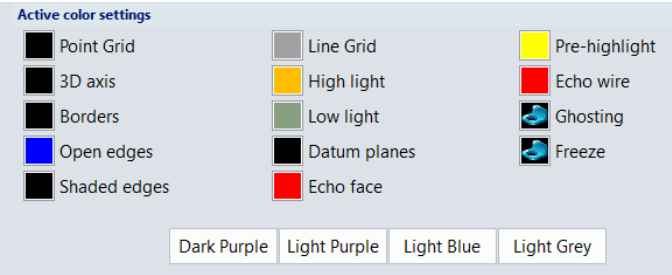

Figure 164: Select Echo wire and Echo Face

4. Click **OK.**

5. **Result:** Red colour echo lines shown are more visible.

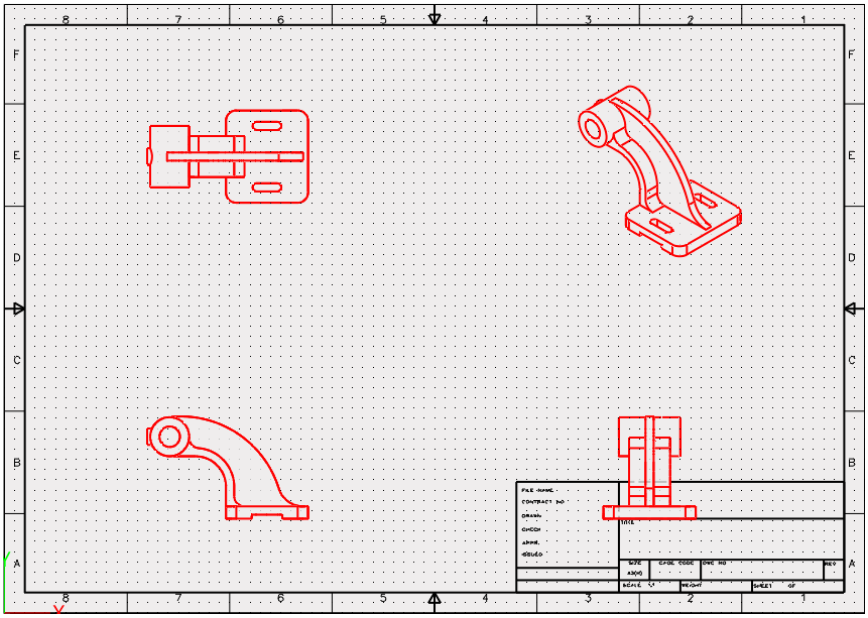

Figure 165: Red Echo Lines

Alternatively, select the Line Color before entering the 2D environment.

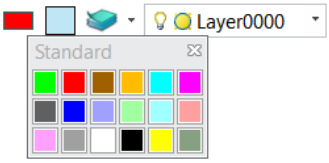

Figure 166: Line Colour

© Dream Technology System 2018
DTS Group Training Centres Location:
Singapore 2, Kallang Avenue #08-18 CT Hub, Singapore 339407
Johor Bahru Unit 07-04, Austin18, Jalan Austin Perdana 3, Taman Austin Perdana, 81100 Johor Bahru, Johor
Penang 1A-2-02 @ One Precinct (1337) Lengkok Mayang Pasir, 11900 Bayan Baru, Penang.
Kuala Lumpur 221, Block A, Kelana Center Point, Jalan SS7/19, 47301 Petaling Jaya, Selangor
info@dtsys.sg / info@dtsys.ny

Note 3:

Toggle Options Details:

There are more options to toggle. Here are the descriptions of some of these icons.

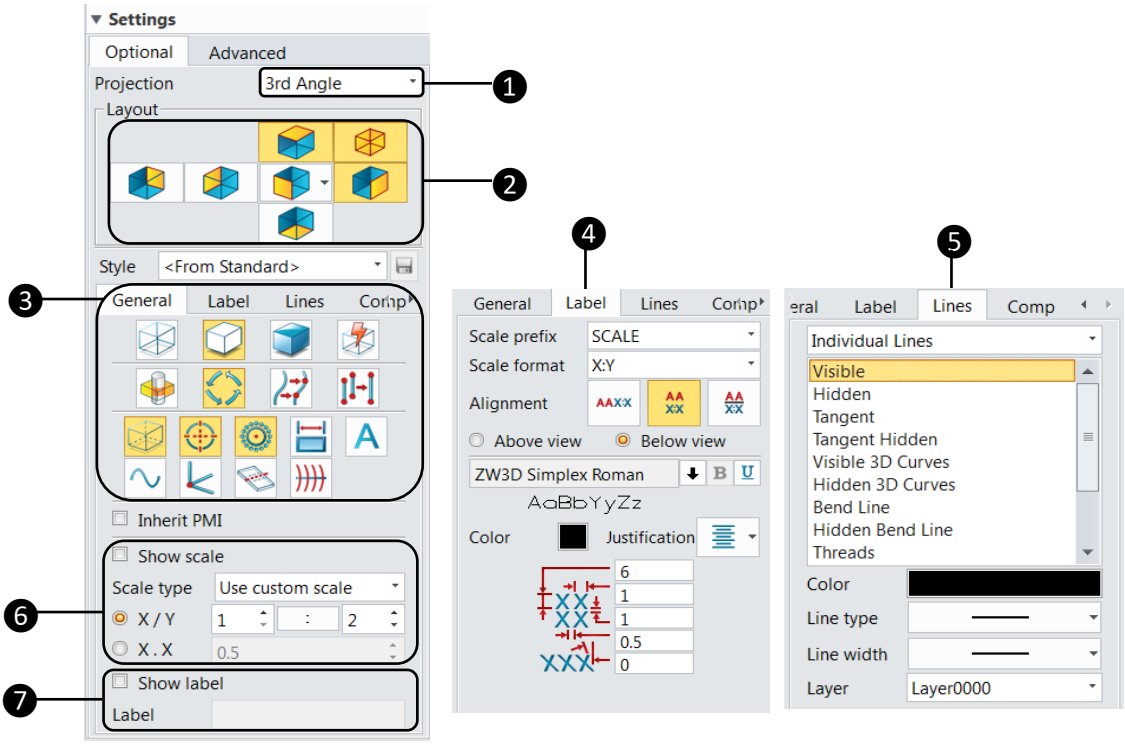

Figure 167: Toggle Options

#	Component	Description
1	Projection	1st or 3rd Angle Projection
2	Layout	Select/Unselect to obtain desired views Commonly used icon: ISO view
3	Style – General	Commonly used icon: Shaded View Hidden Line
4	Style – Label	Customization of Label Position, Font, Size, Colour etc
5	Style – Lines	Customization of Line Colour, Type, Width, etc.
6	Show Scale	Customization of Scale Type and Scale Ratio
7	Show Label	Show/Hide Label

© Dream Technology System 2018
DTS Group Training Centres Location:
Singapore 2, Kallang Avenue #08-18 CT Hub, Singapore 339407
Johor Bahru Unit 07-04, Austin18, Jalan Austin Perdana 3, Taman Austin Perdana, 81100 Johor Bahru, Johor
Penang 1A-2-02 @ One Precinct (1337) Lengkok Mayang Pasir, 11900 Bayan Baru, Penang.
Kuala Lumpur 221, Block A, Kelana Center Point, Jalan SS7/19, 47301 Petaling Jaya, Selangor
info@dtsys.sg / info@dtsys.ny

Create a Base View

1. **Highlight** the previous Layout Views and press the **delete** button to the keyboard to remove them.

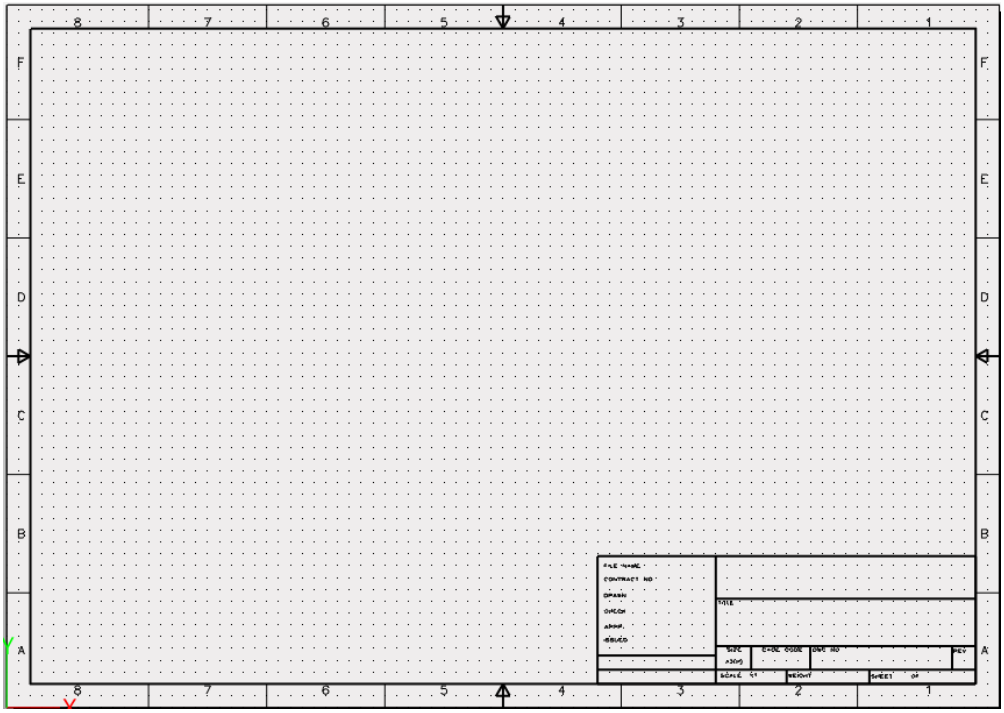

Figure 168: Fresh Drawing Page

2. Under the **Layout** ribbon tab, select **Standard**.

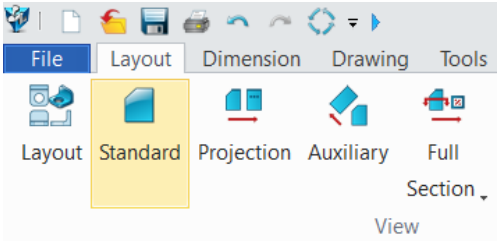

Figure 169: Standard icon

© Dream Technology System 2018
DTS Group Training Centres Location:
Singapore 2, Kallang Avenue #08-18 CT Hub, Singapore 339407
Johor Bahru Unit 07-04, Austin18, Jalan Austin Perdana 3, Taman Austin Perdana, 81100 Johor Bahru, Johor
Penang 1A-2-02 @ One Precinct (1337) Lengkok Mayang Pasir, 11900 Bayan Baru, Penang.
Kuala Lumpur 221, Block A, Kelana Center Point, Jalan SS7/19, 47301 Petaling Jaya, Selangor
info@dtsys.sg / info@dtsys.ny

3. Click on any preferred location to place the Base View. In this case Select **Point 1.**

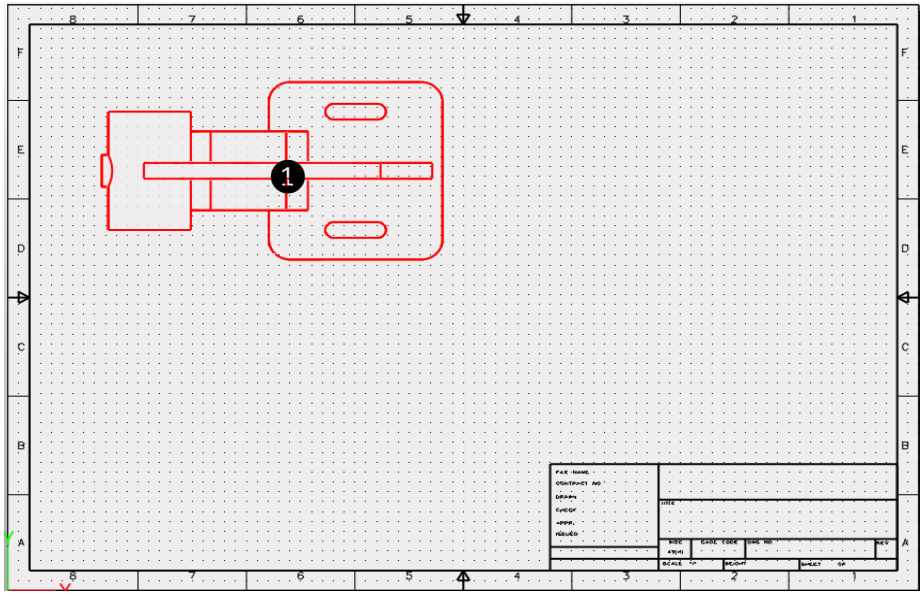

Figure 170: Location of Base View

4. Click **OK.**

5. **Result:** Base View is obtained.

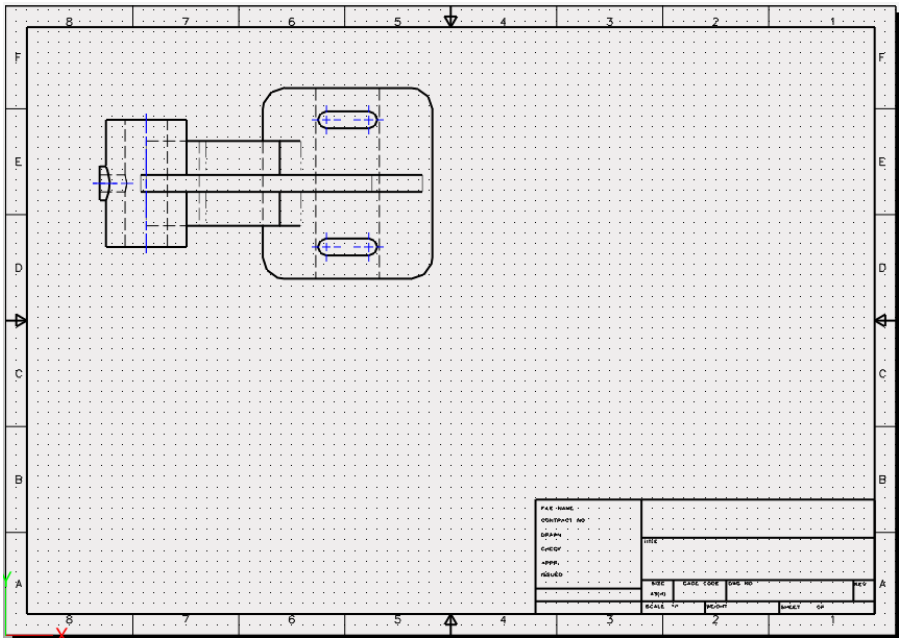

Figure 171: Base View

© Dream Technology System 2018
DTS Group Training Centres Location:
Singapore 2, Kallang Avenue #08-18 CT Hub, Singapore 339407
Johor Bahru Unit 07-04, Austin18, Jalan Austin Perdana 3, Taman Austin Perdana, 81100 Johor Bahru, Johor
Penang 1A-2-02 @ One Precinct (1337) Lengkok Mayang Pasir, 11900 Bayan Baru, Penang.
Kuala Lumpur 221, Block A, Kelana Center Point, Jalan SS7/19, 47301 Petaling Jaya, Selangor
info@dtsys.sg / info@dtsys.ny

Creating Projection View

1. Under the **Layout** ribbon tab, select **Projection**.

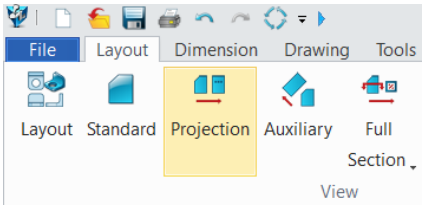

Figure 172: Projection icon

2. Select **Base View**.

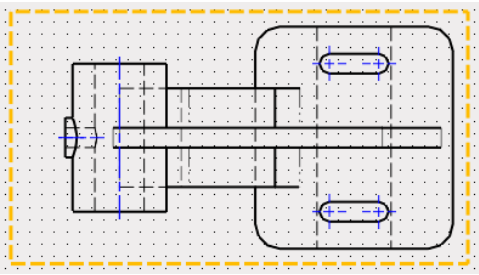

Figure 173: Select Base View

1. Click on any preferred location to place the Projected View. In this case Select **Point 1.**

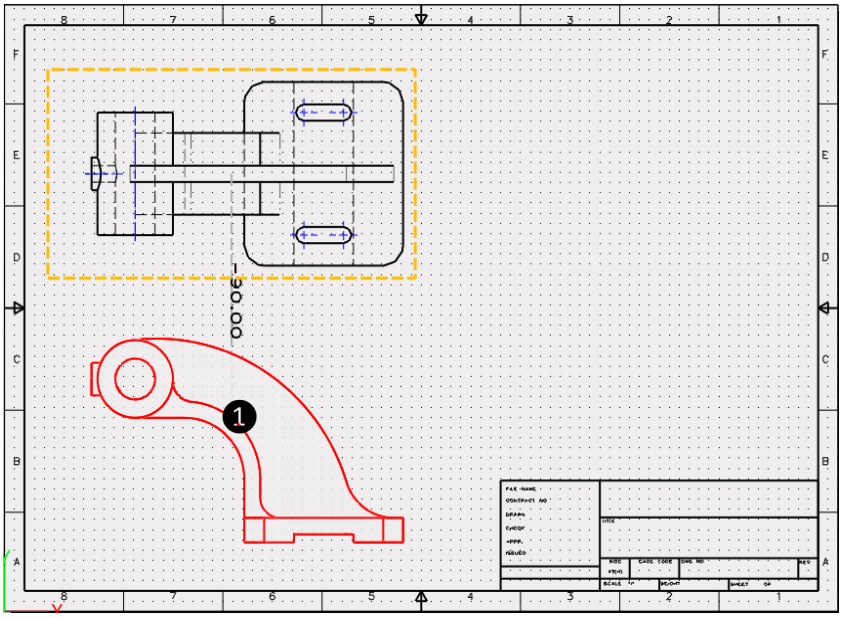

Figure 174: Location of Projection View

© Dream Technology System 2018
DTS Group Training Centres Location:
Singapore 2, Kallang Avenue #08-18 CT Hub, Singapore 339407
Johor Bahru Unit 07-04, Austin18, Jalan Austin Perdana 3, Taman Austin Perdana, 81100 Johor Bahru, Johor
Penang 1A-2-02 @ One Precinct (1337) Lengkok Mayang Pasir, 11900 Bayan Baru, Penang.
Kuala Lumpur 221, Block A, Kelana Center Point, Jalan SS7/19, 47301 Petaling Jaya, Selangor
info@dtsys.sg / info@dtsys.ny

3. Click **OK.**

4. **Result:** Projection View is obtained.

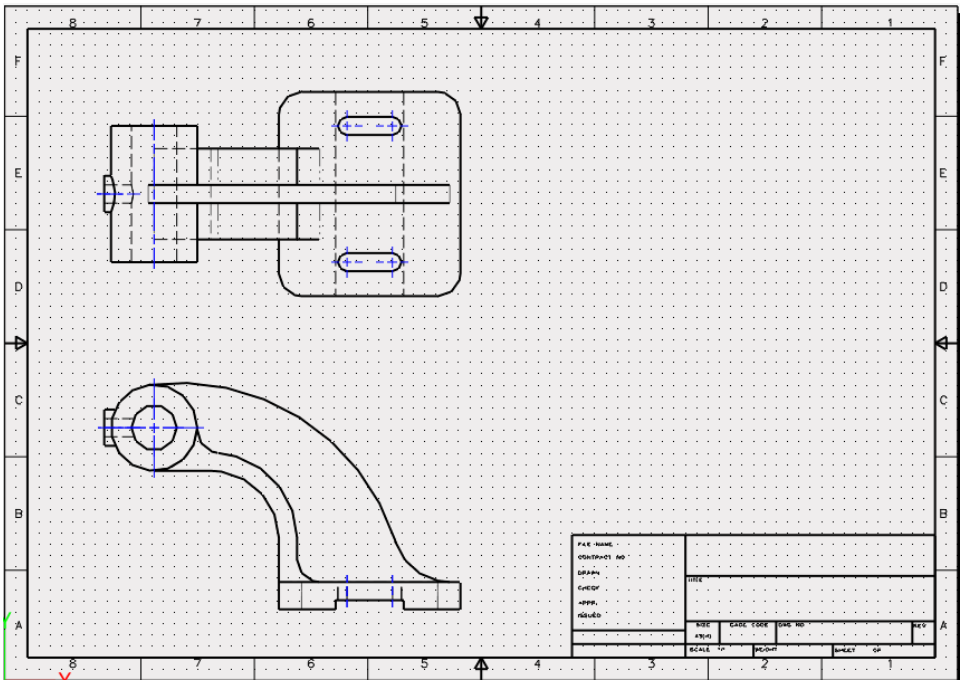

Figure 175: Projection View

Note:

Change the desired **Projection** (1st or 3rd angle projection) and **Dimension Type** (Projected or True) as follows:

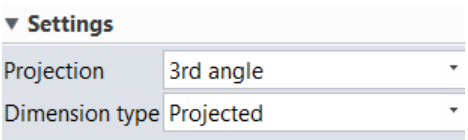

Figure 176: Projection Options

© Dream Technology System 2018
DTS Group Training Centres Location:
Singapore 2, Kallang Avenue #08-18 CT Hub, Singapore 339407
Johor Bahru Unit 07-04, Austin18, Jalan Austin Perdana 3, Taman Austin Perdana, 81100 Johor Bahru, Johor
Penang 1A-2-02 @ One Precinct (1337) Lengkok Mayang Pasir, 11900 Bayan Baru, Penang.
Kuala Lumpur 221, Block A, Kelana Center Point, Jalan SS7/19, 47301 Petaling Jaya, Selangor
info@dtsys.sg / info@dtsys.ny

Add Assigned View

1. Click on the **Exit** button to exit the 2D environment and back to 3D modelling.

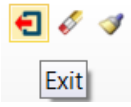

Figure 177: Exit button

2. **Rotate** the part to a desired View.

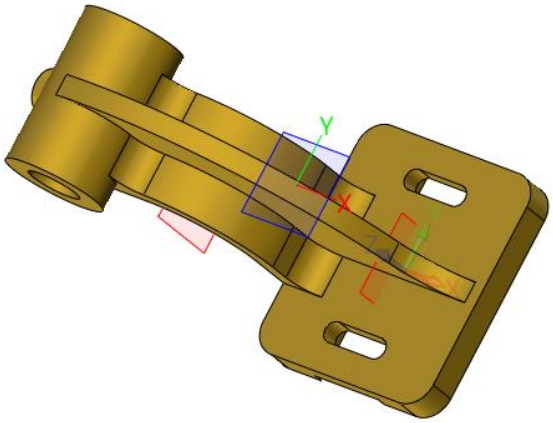

Figure 178: Rotate part to desired view

3. Under **Managers**, select View **Manager**.

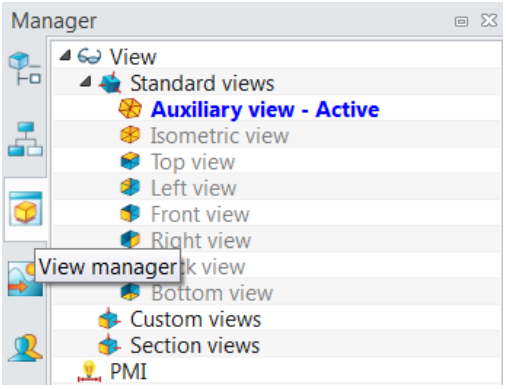

Figure 179: View Manager

© Dream Technology System 2018
DTS Group Training Centres Location:
Singapore 2, Kallang Avenue #08-18 CT Hub, Singapore 339407
Johor Bahru Unit 07-04, Austin18, Jalan Austin Perdana 3, Taman Austin Perdana, 81100 Johor Bahru, Johor
Penang 1A-2-02 @ One Precinct (1337) Lengkok Mayang Pasir, 11900 Bayan Baru, Penang.
Kuala Lumpur 221, Block A, Kelana Center Point, Jalan SS7/19, 47301 Petaling Jaya, Selangor
info@dtsys.sg / info@dtsys.ny

4. Under **Custom views**, select **New**.

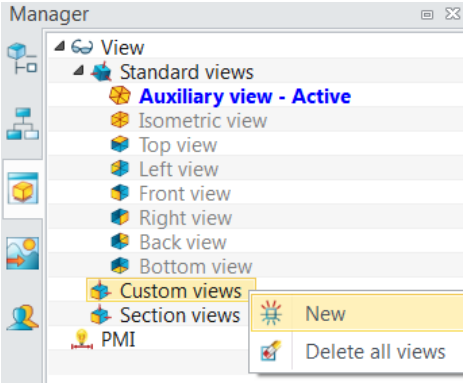

Figure 180: New Custom View

5. Name the new view as **View1.**

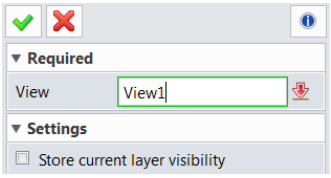

Figure 181: Name View1

6. Click **OK.**

7. **Right-click** and Select 2D Sheet to enter 2D environment.

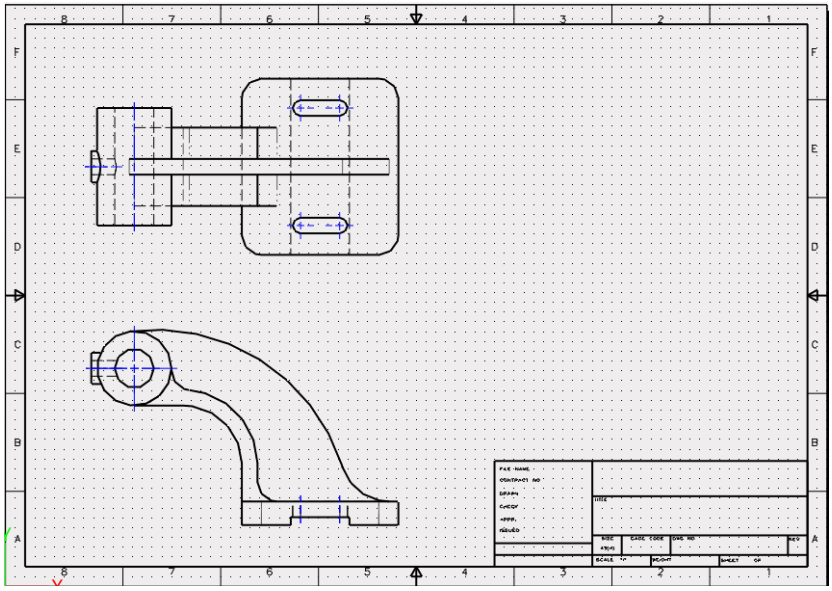

Figure 182: Back to 2D Environment

© Dream Technology System 2018
DTS Group Training Centres Location:
Singapore 2, Kallang Avenue #08-18 CT Hub, Singapore 339407
Johor Bahru Unit 07-04, Austin18, Jalan Austin Perdana 3, Taman Austin Perdana, 81100 Johor Bahru, Johor
Penang 1A-2-02 @ One Precinct (1337) Lengkok Mayang Pasir, 11900 Bayan Baru, Penang.
Kuala Lumpur 221, Block A, Kelana Center Point, Jalan SS7/19, 47301 Petaling Jaya, Selangor
info@dtsys.sg / info@dtsys.ny

8. Under the **Layout** ribbon tab, select **Standard**.

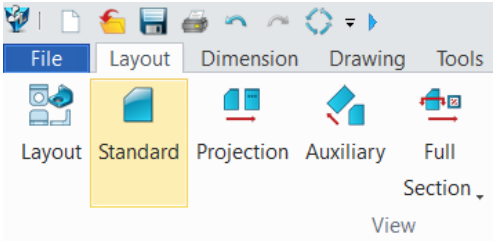

Figure 183: Standard View icon

9. Under the **View,** select **View1**.

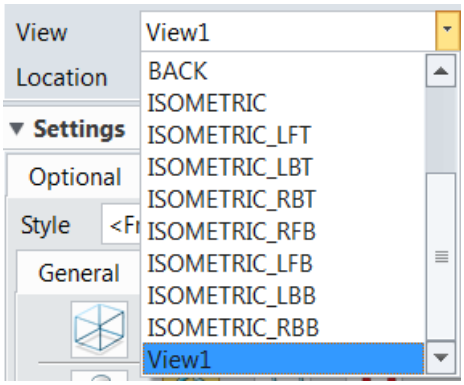

Figure 184: Select View1

10. Click on any preferred location to place the Assigned View. In this case Select **Point 1.**

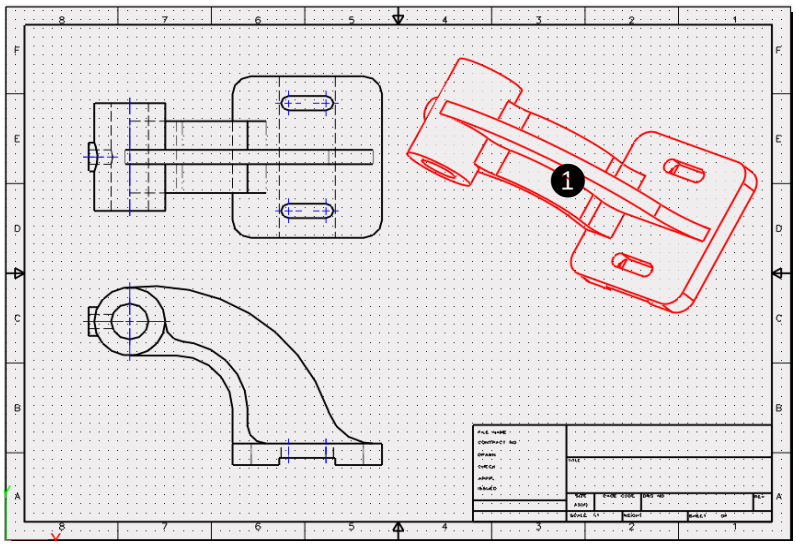

Figure 185: Position of Assigned View

© Dream Technology System 2018
DTS Group Training Centres Location:
Singapore 2, Kallang Avenue #08-18 CT Hub, Singapore 339407
Johor Bahru Unit 07-04, Austin18, Jalan Austin Perdana 3, Taman Austin Perdana, 81100 Johor Bahru, Johor
Penang 1A-2-02 @ One Precinct (1337) Lengkok Mayang Pasir, 11900 Bayan Baru, Penang.
Kuala Lumpur 221, Block A, Kelana Center Point, Jalan SS7/19, 47301 Petaling Jaya, Selangor
info@dtsys.sg / info@dtsys.ny

11. Click **OK.**

12. Result: View is assigned.

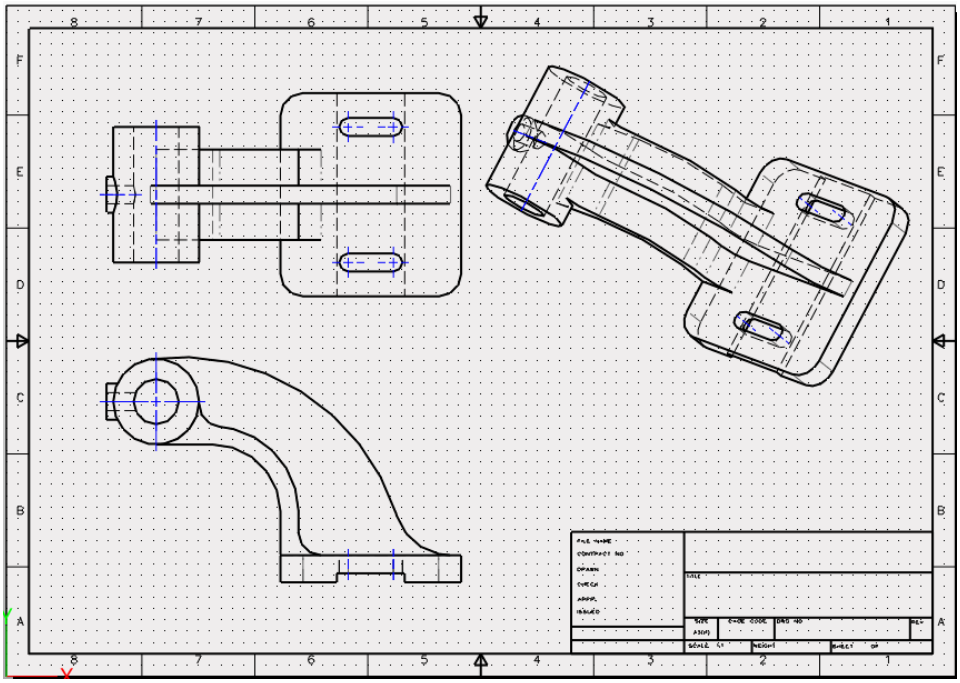

Figure 186: Assigned View

Create ISO View

1. **Highlight** the previous Assign View and press the **delete** button to the keyboard to remove it.

© Dream Technology System 2018
DTS Group Training Centres Location:
Singapore 2, Kallang Avenue #08-18 CT Hub, Singapore 339407
Johor Bahru Unit 07-04, Austin18, Jalan Austin Perdana 3, Taman Austin Perdana, 81100 Johor Bahru, Johor
Penang 1A-2-02 @ One Precinct (1337) Lengkok Mayang Pasir, 11900 Bayan Baru, Penang.
Kuala Lumpur 221, Block A, Kelana Center Point, Jalan SS7/19, 47301 Petaling Jaya, Selangor
info@dtsys.sg / info@dtsys.ny

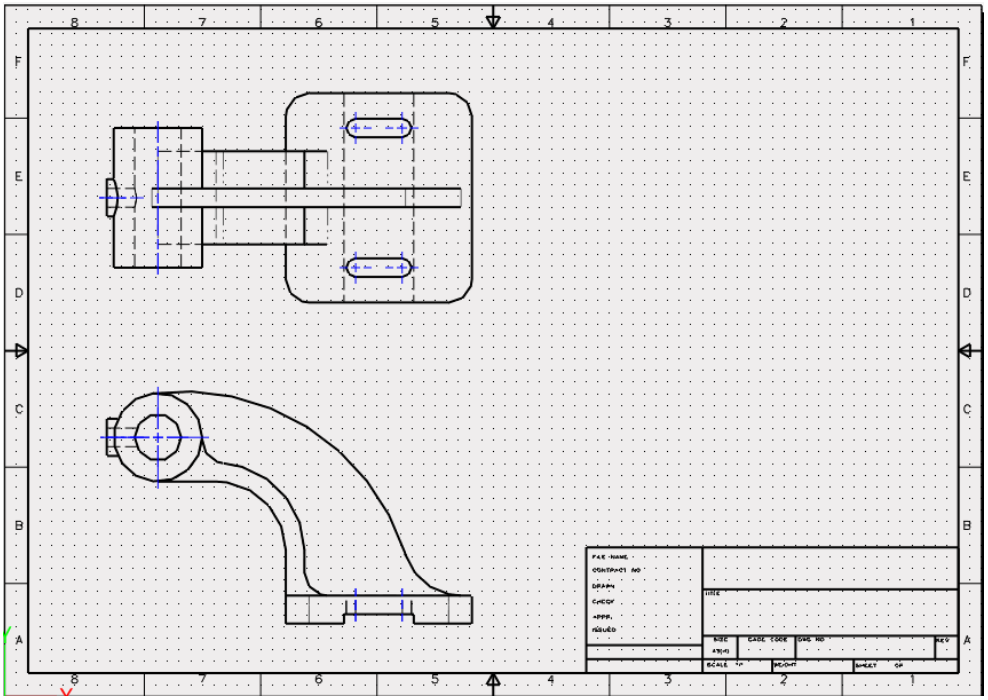

Figure 187: Delete Assigned View

2. Under the **Layout** ribbon tab, select **Standard**.

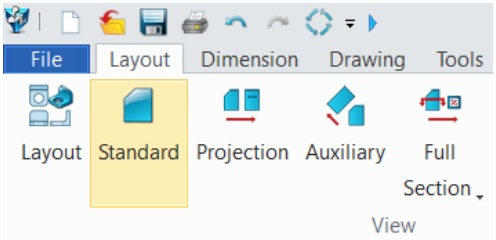

Figure 188: Standard icon

© Dream Technology System 2018
DTS Group Training Centres Location:
Singapore 2, Kallang Avenue #08-18 CT Hub, Singapore 339407
Johor Bahru Unit 07-04, Austin18, Jalan Austin Perdana 3, Taman Austin Perdana, 81100 Johor Bahru, Johor
Penang 1A-2-02 @ One Precinct (1337) Lengkok Mayang Pasir, 11900 Bayan Baru, Penang.
Kuala Lumpur 221, Block A, Kelana Center Point, Jalan SS7/19, 47301 Petaling Jaya, Selangor
info@dtsys.sg / info@dtsys.ny

3. Under **View**, select **ISOMETRIC**.

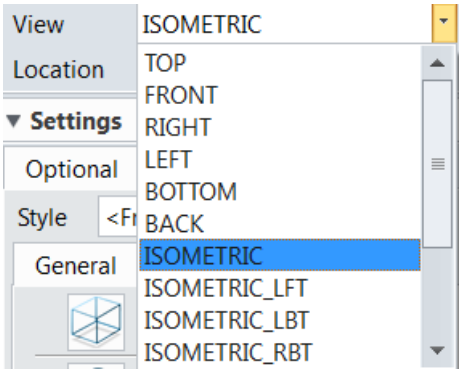

Figure 189: Select ISOMETRIC

4. Click on any preferred location to place the ISO View. In this case select **1st point.**

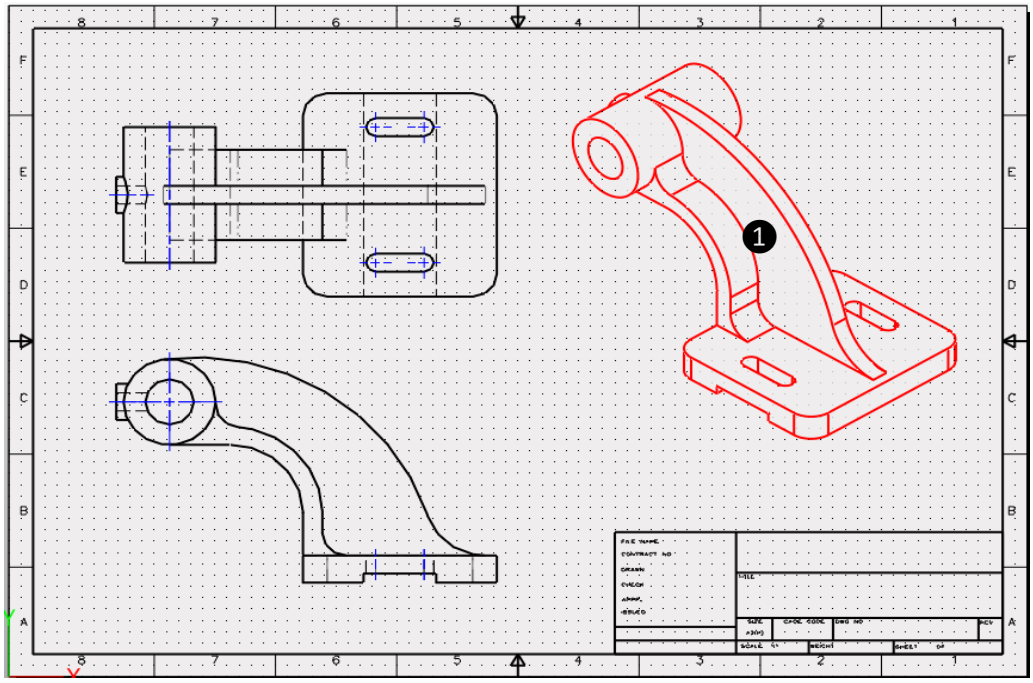

Figure 190: Position of ISO view

5. Click **OK.**

© Dream Technology System 2018
DTS Group Training Centres Location:
Singapore 2, Kallang Avenue #08-18 CT Hub, Singapore 339407
Johor Bahru Unit 07-04, Austin18, Jalan Austin Perdana 3, Taman Austin Perdana, 81100 Johor Bahru, Johor
Penang 1A-2-02 @ One Precinct (1337) Lengkok Mayang Pasir, 11900 Bayan Baru, Penang.
Kuala Lumpur 221, Block A, Kelana Center Point, Jalan SS7/19, 47301 Petaling Jaya, Selangor
info@dtsys.sg / info@dtsys.ny

6. **Result:** ISO view is obtained.

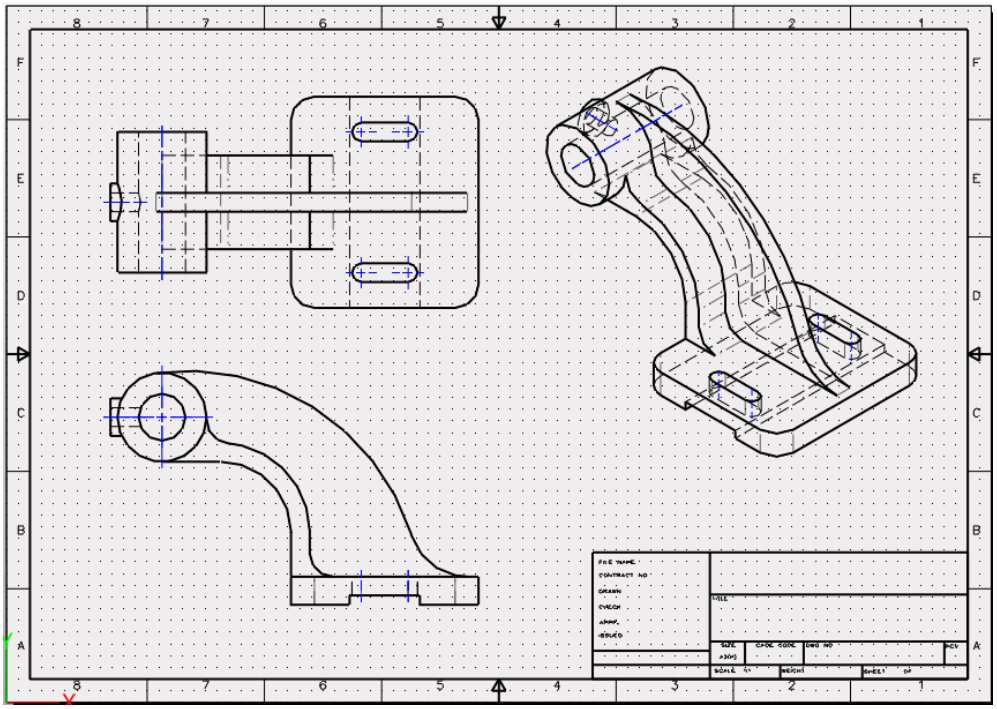

Figure 191: ISO View

© Dream Technology System 2018
DTS Group Training Centres Location:
Singapore 2, Kallang Avenue #08-18 CT Hub, Singapore 339407
Johor Bahru Unit 07-04, Austin18, Jalan Austin Perdana 3, Taman Austin Perdana, 81100 Johor Bahru, Johor
Penang 1A-2-02 @ One Precinct (1337) Lengkok Mayang Pasir, 11900 Bayan Baru, Penang.
Kuala Lumpur 221, Block A, Kelana Center Point, Jalan SS7/19, 47301 Petaling Jaya, Selangor
info@dtsys.sg / info@dtsys.ny

Create Section View

1. **Highlight** the previous Assigned View and press the **delete** button to the keyboard to remove it.

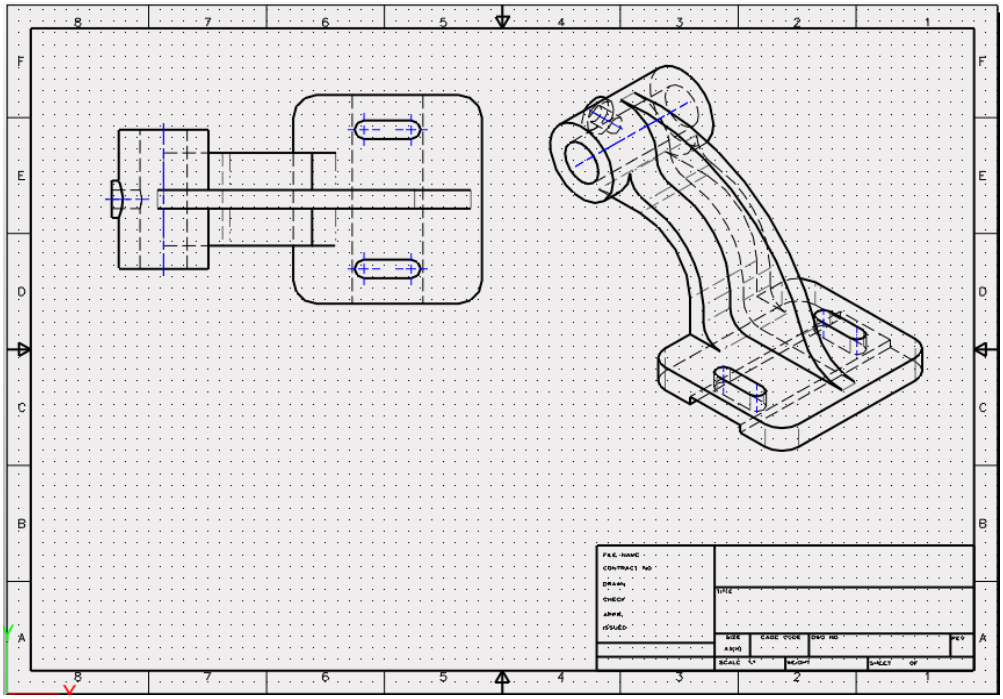

Figure 192: Remove Assigned View

2. Under the **Layout** ribbon tab, select **Full Section**.

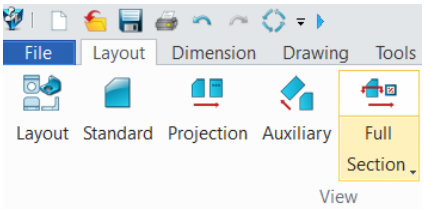

Figure 193: Full Section icon

© Dream Technology System 2018
DTS Group Training Centres Location:
Singapore 2, Kallang Avenue #08-18 CT Hub, Singapore 339407
Johor Bahru Unit 07-04, Austin18, Jalan Austin Perdana 3, Taman Austin Perdana, 81100 Johor Bahru, Johor
Penang 1A-2-02 @ One Precinct (1337) Lengkok Mayang Pasir, 11900 Bayan Baru, Penang.
Kuala Lumpur 221, Block A, Kelana Center Point, Jalan SS7/19, 47301 Petaling Jaya, Selangor
info@dtsys.sg / info@dtsys.ny

3. Select **Base View.**

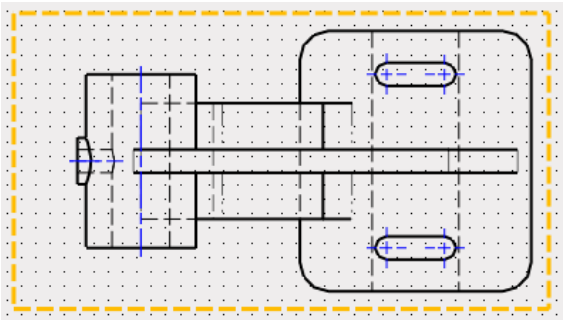

Figure 194: Select Base View

4. Click **1st point** and then **2nd point.**

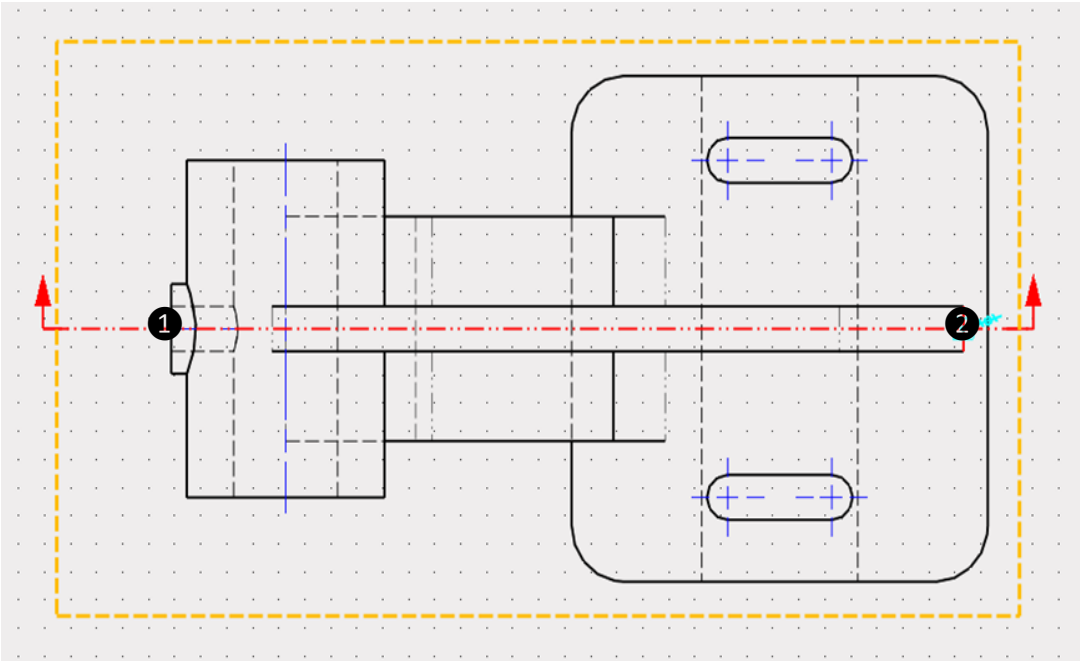

Figure 195: Pick 1st and 2nd point

5. Select **Location.**

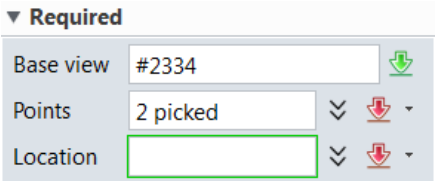

Figure 196: Select Location

© Dream Technology System 2018
DTS Group Training Centres Location:
Singapore 2, Kallang Avenue #08-18 CT Hub, Singapore 339407
Johor Bahru Unit 07-04, Austin18, Jalan Austin Perdana 3, Taman Austin Perdana, 81100 Johor Bahru, Johor
Penang 1A-2-02 @ One Precinct (1337) Lengkok Mayang Pasir, 11900 Bayan Baru, Penang.
Kuala Lumpur 221, Block A, Kelana Center Point, Jalan SS7/19, 47301 Petaling Jaya, Selangor
info@dtsys.sg / info@dtsys.ny

6. Click on any preferred location to place the Section View. In this case select **3rd point.**

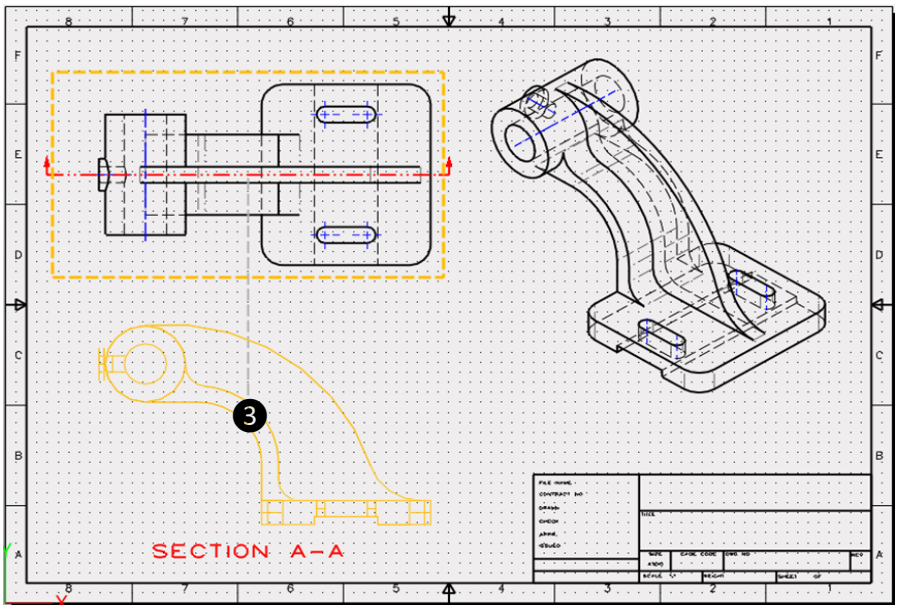

Figure 198: Position of Section View

7. Click **OK.**

8. **Result:** Section View obtained.

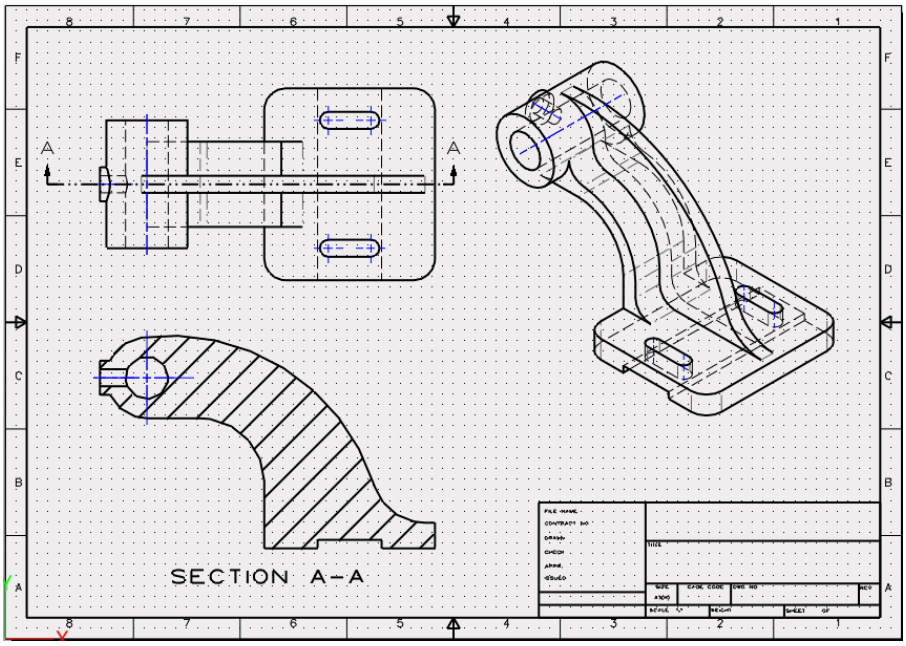

Figure 199: Section View

© Dream Technology System 2018
DTS Group Training Centres Location:
Singapore 2, Kallang Avenue #08-18 CT Hub, Singapore 339407
Johor Bahru Unit 07-04, Austin18, Jalan Austin Perdana 3, Taman Austin Perdana, 81100 Johor Bahru, Johor
Penang 1A-2-02 @ One Precinct (1337) Lengkok Mayang Pasir, 11900 Bayan Baru, Penang.
Kuala Lumpur 221, Block A, Kelana Center Point, Jalan SS7/19, 47301 Petaling Jaya, Selangor
info@dtsys.sg / info@dtsys.ny

Note:

Change the desired **View Label** or **Flip arrow direction** as follows.

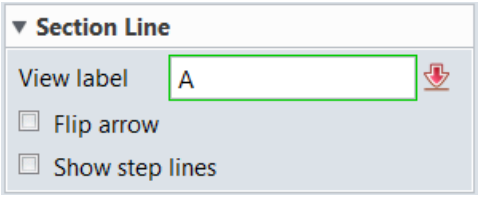

Figure 200: Section Options

© Dream Technology System 2018
DTS Group Training Centres Location:
Singapore 2, Kallang Avenue #08-18 CT Hub, Singapore 339407
Johor Bahru Unit 07-04, Austin18, Jalan Austin Perdana 3, Taman Austin Perdana, 81100 Johor Bahru, Johor
Penang 1A-2-02 @ One Precinct (1337) Lengkok Mayang Pasir, 11900 Bayan Baru, Penang.
Kuala Lumpur 221, Block A, Kelana Center Point, Jalan SS7/19, 47301 Petaling Jaya, Selangor
info@dtsys.sg / info@dtsys.ny

Create Detail View

1. Under the **Layout** ribbon tab, select **Detail**.

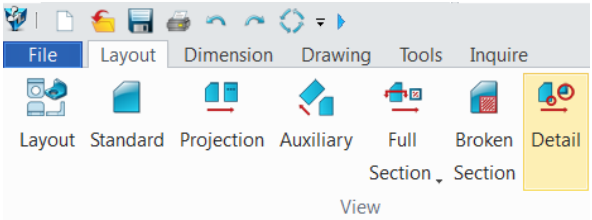

Figure 201: Detail icon

2. Select **Base View**.

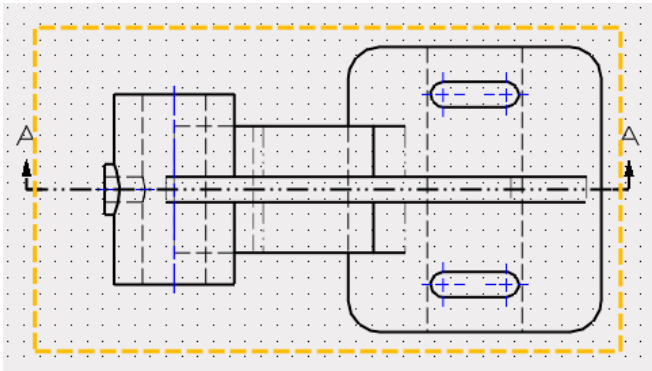

Figure 202: Select Base View

3. Select **1st point** (Circle origin), **2nd point** (Circle outer radius) and then the **3rd point** (Label location - Detail A).

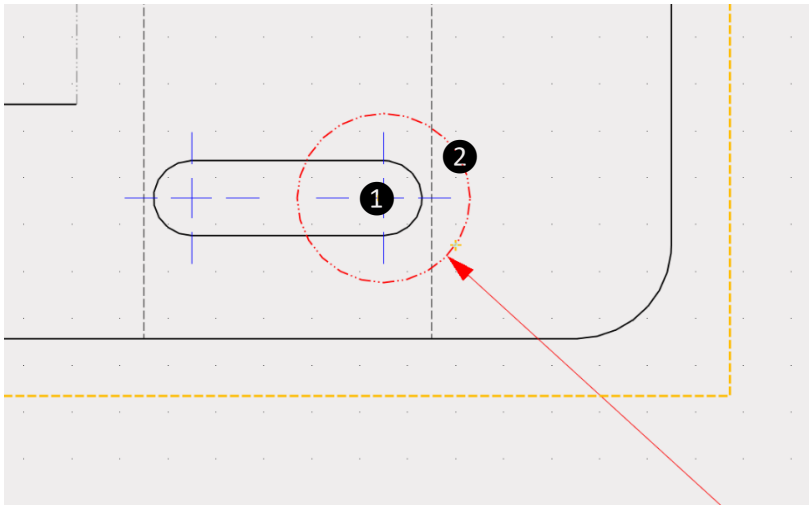

Figure 203: Select 1st and 2nd point

© Dream Technology System 2018
DTS Group Training Centres Location:
Singapore 2, Kallang Avenue #08-18 CT Hub, Singapore 339407
Johor Bahru Unit 07-04, Austin18, Jalan Austin Perdana 3, Taman Austin Perdana, 81100 Johor Bahru, Johor
Penang 1A-2-02 @ One Precinct (1337) Lengkok Mayang Pasir, 11900 Bayan Baru, Penang.
Kuala Lumpur 221, Block A, Kelana Center Point, Jalan SS7/19, 47301 Petaling Jaya, Selangor
info@dtsys.sg / info@dtsys.ny

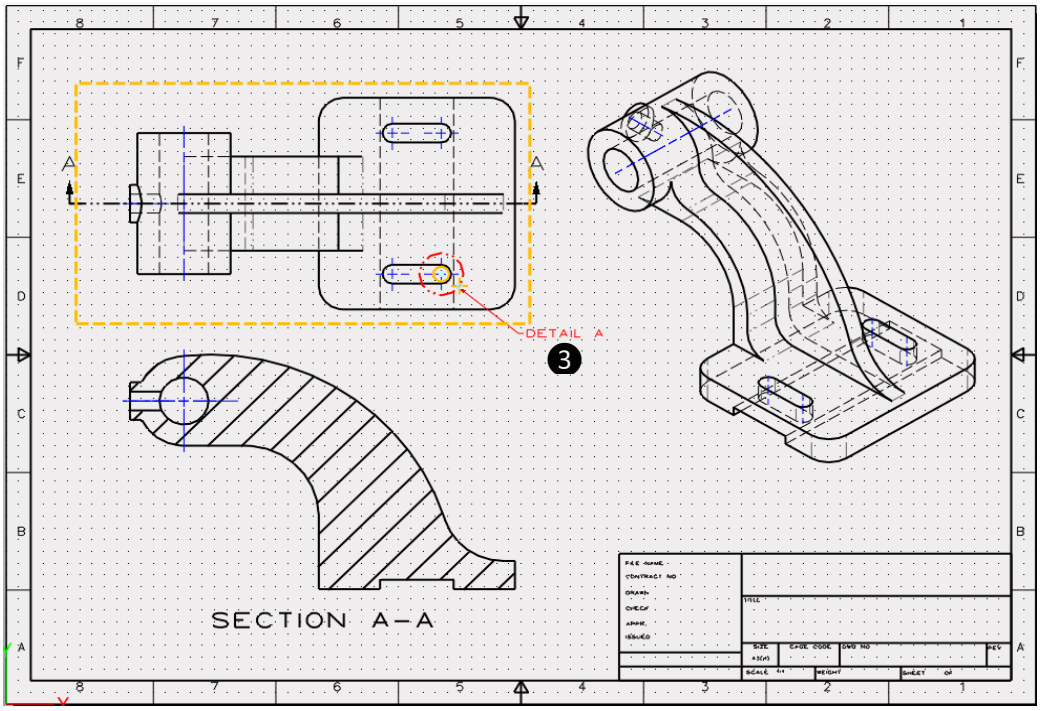

Figure 204: Select 3rd point

4. Select Location.

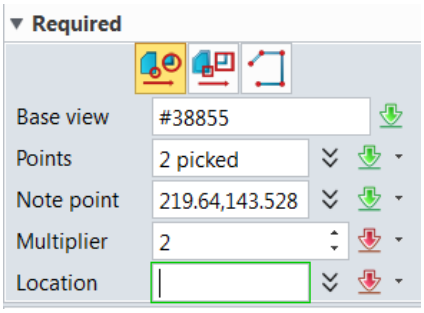

Figure 205: Select Location

© Dream Technology System 2018
DTS Group Training Centres Location:
Singapore 2, Kallang Avenue #08-18 CT Hub, Singapore 339407
Johor Bahru Unit 07-04, Austin18, Jalan Austin Perdana 3, Taman Austin Perdana, 81100 Johor Bahru, Johor
Penang 1A-2-02 @ One Precinct (1337) Lengkok Mayang Pasir, 11900 Bayan Baru, Penang.
Kuala Lumpur 221, Block A, Kelana Center Point, Jalan SS7/19, 47301 Petaling Jaya, Selangor
info@dtsys.sg / info@dtsys.ny

5. Click on any preferred location to place the Detail View. In this case select **4th point.**

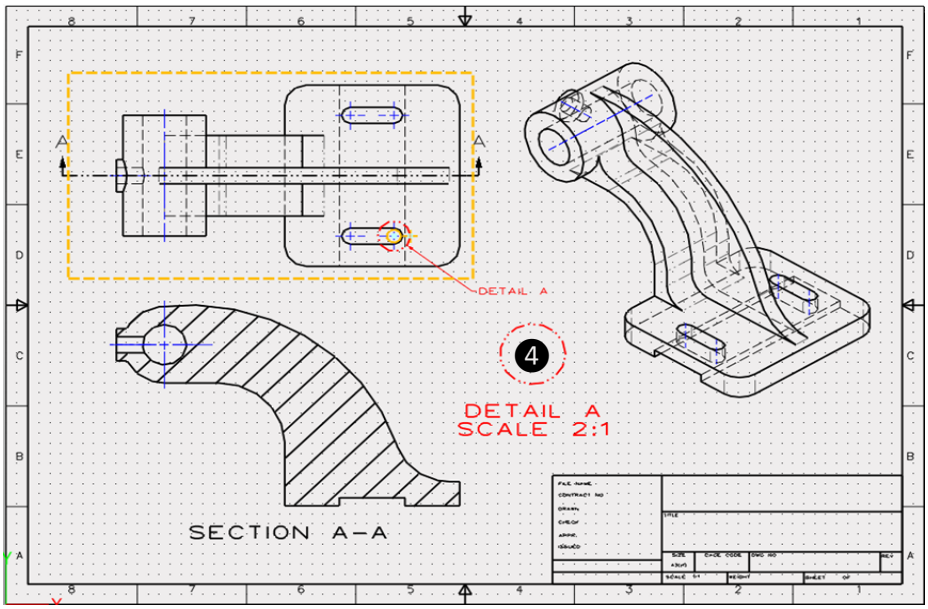

Figure 206: Select 4th point

6. Click **OK.**

7. **Result:** Detail View obtained.

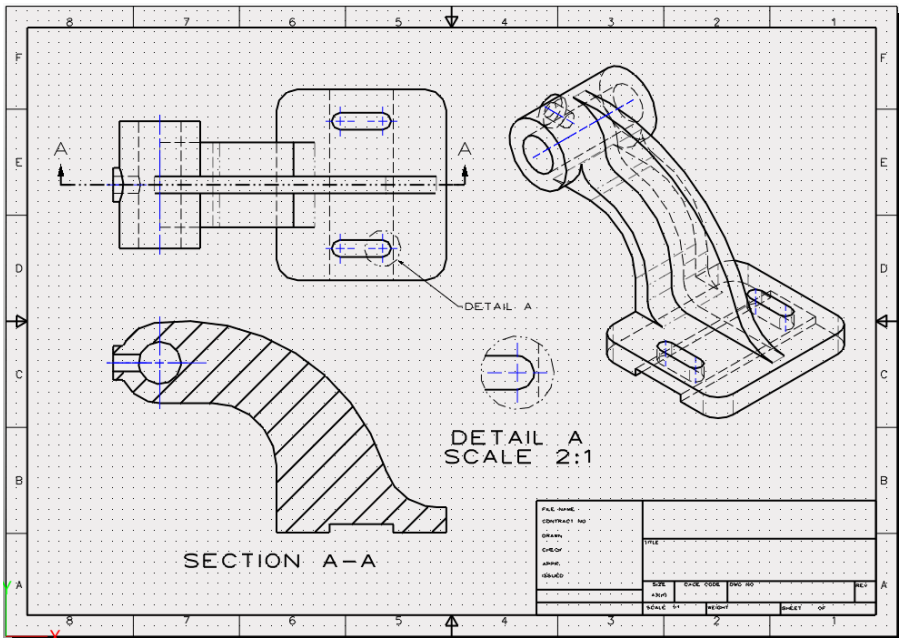

Figure 207: Detail View

© Dream Technology System 2018
DTS Group Training Centres Location:
Singapore 2, Kallang Avenue #08-18 CT Hub, Singapore 339407
Johor Bahru Unit 07-04, Austin18, Jalan Austin Perdana 3, Taman Austin Perdana, 81100 Johor Bahru, Johor
Penang 1A-2-02 @ One Precinct (1337) Lengkok Mayang Pasir, 11900 Bayan Baru, Penang.
Kuala Lumpur 221, Block A, Kelana Center Point, Jalan SS7/19, 47301 Petaling Jaya, Selangor
info@dtsys.sg / info@dtsys.my

Note:

Change the desired **Label** and **Scale details** as follows.

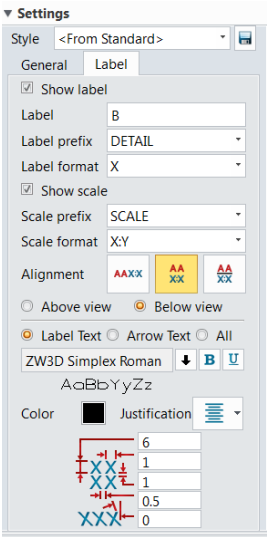

Figure 208: Detail View options

Alternatively, you may **Right-click** on the text and select **Attributes** to change the text Attributes. Toggle between the **Options** and **More** tab.

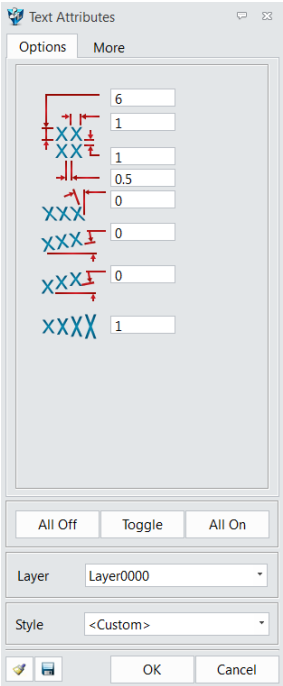

Figure 209: Text Attributes

© Dream Technology System 2018
DTS Group Training Centres Location:
Singapore 2, Kallang Avenue #08-18 CT Hub, Singapore 339407
Johor Bahru Unit 07-04, Austin18, Jalan Austin Perdana 3, Taman Austin Perdana, 81100 Johor Bahru, Johor
Penang 1A-2-02 @ One Precinct (1337) Lengkok Mayang Pasir, 11900 Bayan Baru, Penang.
Kuala Lumpur 221, Block A, Kelana Center Point, Jalan SS7/19, 47301 Petaling Jaya, Selangor
info@dtsys.sg / info@dtsys.ny

Example:

1. Open the part named **PMI_Case.Z3** inside **lite training** folder found on the Desktop.

2. Open the **PMI_Case for Demo.**

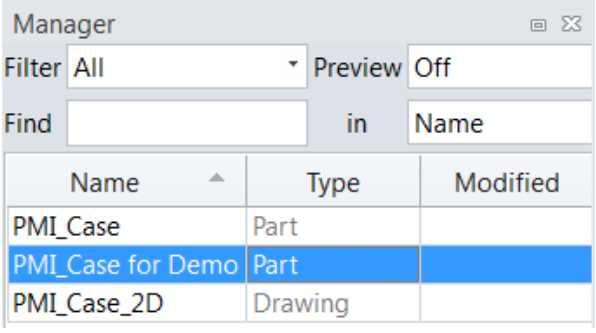

Figure 210: PMI Case for Demo

Using the skills learnt previously, try achieving the following 2D Drawing Example:

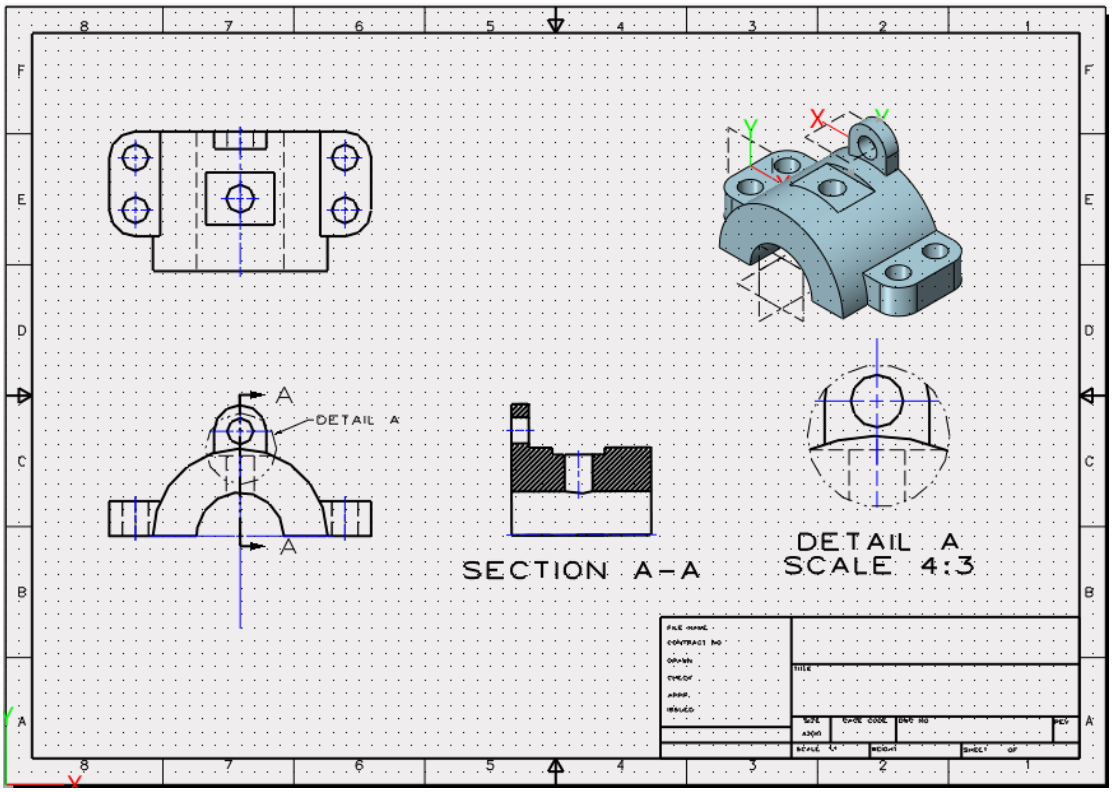

Figure 211: 2D Drawing Example

© Dream Technology System 2018
DTS Group Training Centres Location:
Singapore 2, Kallang Avenue #08-18 CT Hub, Singapore 339407
Johor Bahru Unit 07-04, Austin18, Jalan Austin Perdana 3, Taman Austin Perdana, 81100 Johor Bahru, Johor
Penang 1A-2-02 @ One Precinct (1337) Lengkok Mayang Pasir, 11900 Bayan Baru, Penang.
Kuala Lumpur 221, Block A, Kelana Center Point, Jalan SS7/19, 47301 Petaling Jaya, Selangor
info@dtsys.sg / info@dtsys.ny

Hint:

1. Under **Layout** ribbon tab, select **Layout.**
2. Select **PMI_Case for Demo.**
3. Toggle **ON ISO view.**

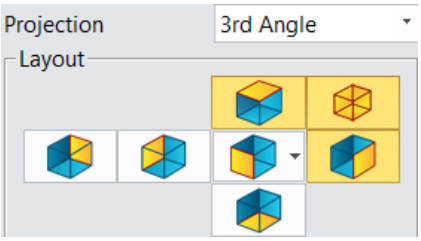

Figure 212: ISO View

4. Change **Scale ratio** to **2:3**

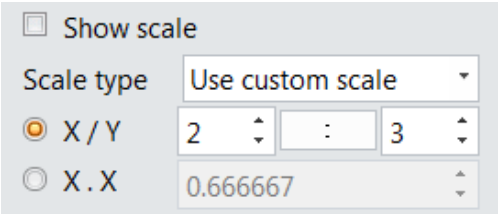

Figure 213: Change scale ratio

5. Click **OK.**
6. **Delete** bottom-right View.
7. Under **Layout** ribbon tab, select **Full Section.**
8. Select **Base View**

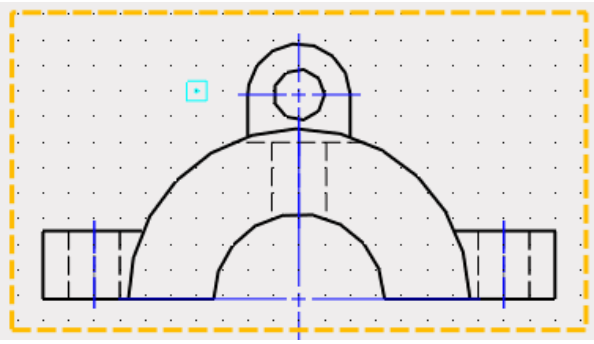

Figure 214: Base View

© Dream Technology System 2018
DTS Group Training Centres Location:
Singapore 2, Kallang Avenue #08-18 CT Hub, Singapore 339407
Johor Bahru Unit 07-04, Austin18, Jalan Austin Perdana 3, Taman Austin Perdana, 81100 Johor Bahru, Johor
Penang 1A-2-02 @ One Precinct (1337) Lengkok Mayang Pasir, 11900 Bayan Baru, Penang.
Kuala Lumpur 221, Block A, Kelana Center Point, Jalan SS7/19, 47301 Petaling Jaya, Selangor
info@dtsys.sg / info@dtsys.ny

9. Select **1st** and **2nd point.**

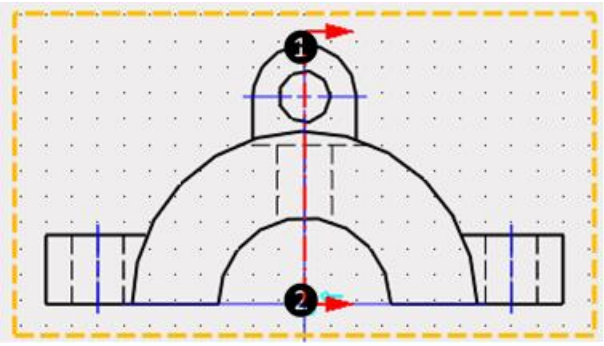

Figure 215: Pick 1st and 2nd point

10. Click on any preferred location to place the Section View. In this case select **3rd point.**

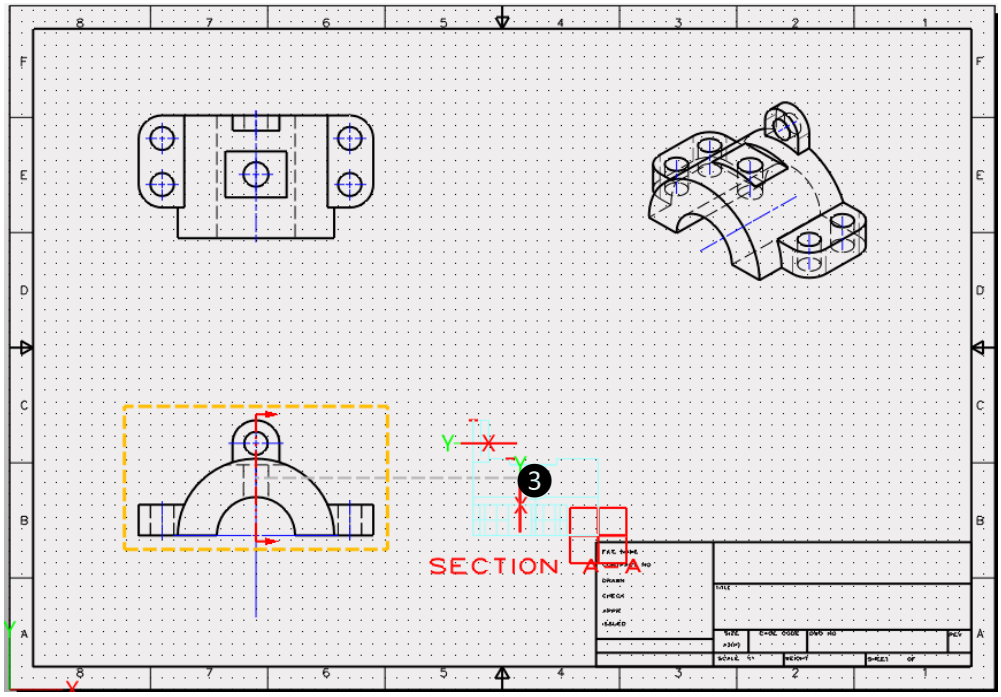

Figure 216: Select 3rd point

© Dream Technology System 2018
DTS Group Training Centres Location:
Singapore 2, Kallang Avenue #08-18 CT Hub, Singapore 339407
Johor Bahru Unit 07-04, Austin18, Jalan Austin Perdana 3, Taman Austin Perdana, 81100 Johor Bahru, Johor
Penang 1A-2-02 @ One Precinct (1337) Lengkok Mayang Pasir, 11900 Bayan Baru, Penang.
Kuala Lumpur 221, Block A, Kelana Center Point, Jalan SS7/19, 47301 Petaling Jaya, Selangor
info@dtsys.sg / info@dtsys.ny

11. Click **OK.**

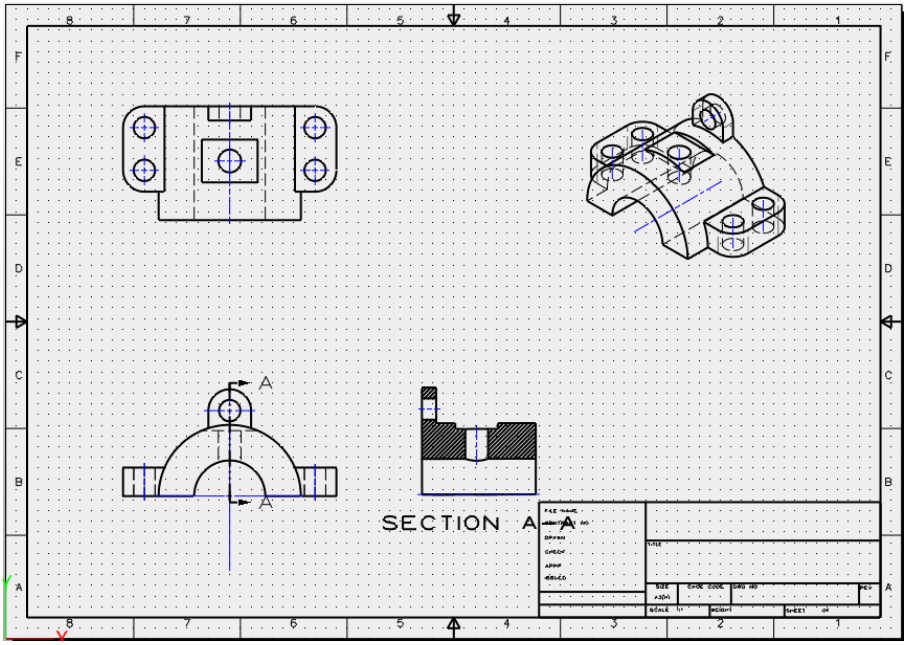

Figure 217: Section View obtained

12. Highlight and **shift** the bottom two views **upwards**.

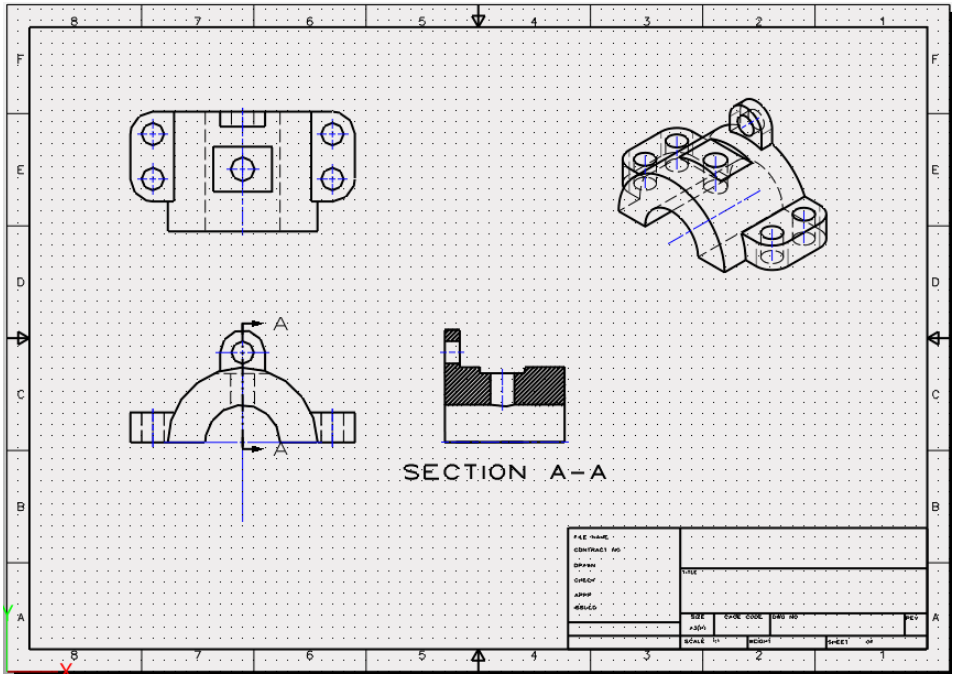

Figure 218: Shift views upwards

© Dream Technology System 2018
DTS Group Training Centres Location:
Singapore 2, Kallang Avenue #08-18 CT Hub, Singapore 339407
Johor Bahru Unit 07-04, Austin18, Jalan Austin Perdana 3, Taman Austin Perdana, 81100 Johor Bahru, Johor
Penang 1A-2-02 @ One Precinct (1337) Lengkok Mayang Pasir, 11900 Bayan Baru, Penang.
Kuala Lumpur 221, Block A, Kelana Center Point, Jalan SS7/19, 47301 Petaling Jaya, Selangor
info@dtsys.sg / info@dtsys.my

13. Under **Layout** ribbon tab, select **Detail.**

14. Select **Base View.**

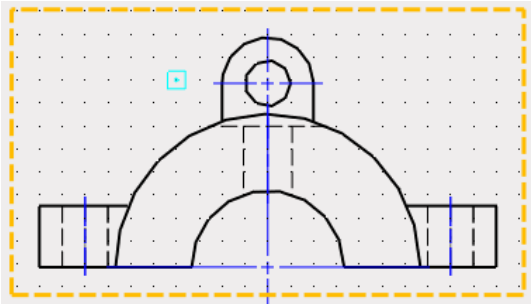

Figure 219: Select Base View

15. Select **1st point** (Circle origin), **2nd point** (Circle outer radius) and then the **3rd point** (Label location - Detail A).

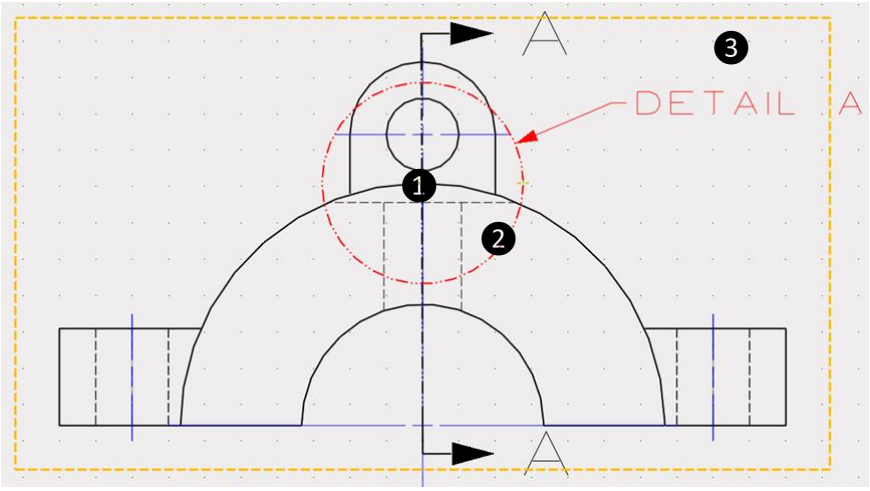

Figure 220: Select 1st, 2nd and 3rd point

16. Select **Location**.

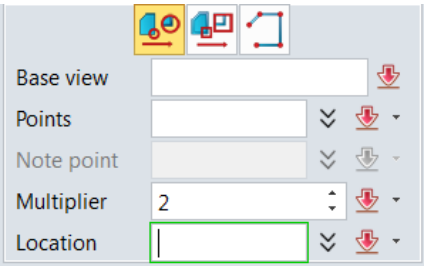

Figure 221: Select Location

© Dream Technology System 2018
DTS Group Training Centres Location:
Singapore 2, Kallang Avenue #08-18 CT Hub, Singapore 339407
Johor Bahru Unit 07-04, Austin18, Jalan Austin Perdana 3, Taman Austin Perdana, 81100 Johor Bahru, Johor
Penang 1A-2-02 @ One Precinct (1337) Lengkok Mayang Pasir, 11900 Bayan Baru, Penang.
Kuala Lumpur 221, Block A, Kelana Center Point, Jalan SS7/19, 47301 Petaling Jaya, Selangor
info@dtsys.sg / info@dtsys.ny

17. Click on any preferred location to place the Detail View. In this case select **4th point.**

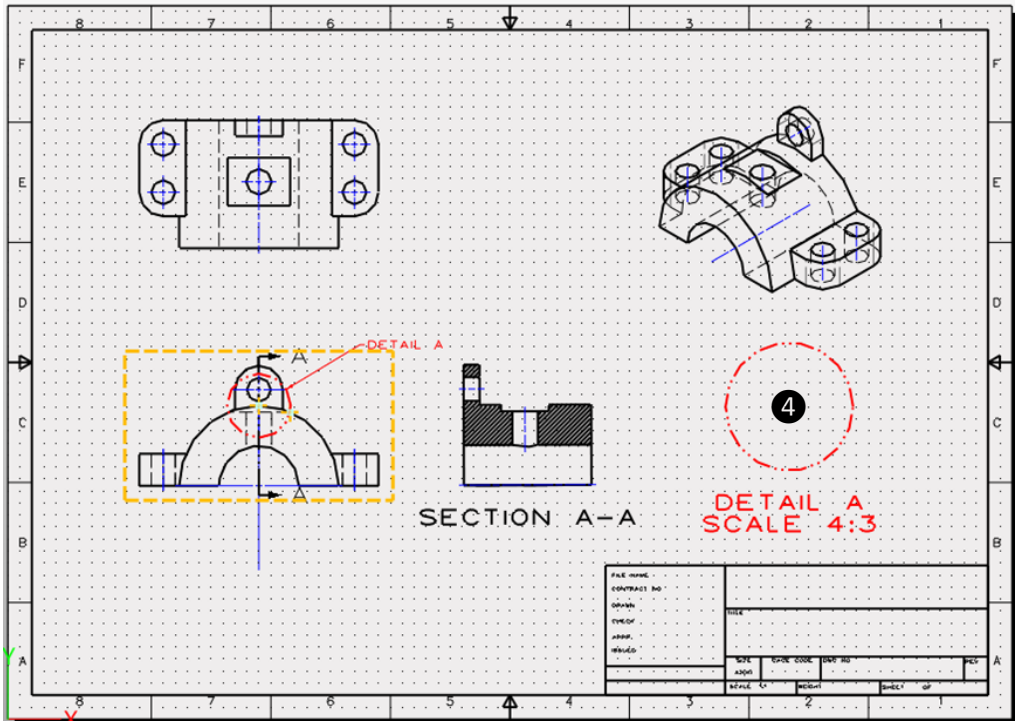

Figure 222: Select 4th point

18. Click **OK.**

19. **Double Click** on the ISO View.

Change the display to **Shaded** and Hide the **Hidden Lines.**

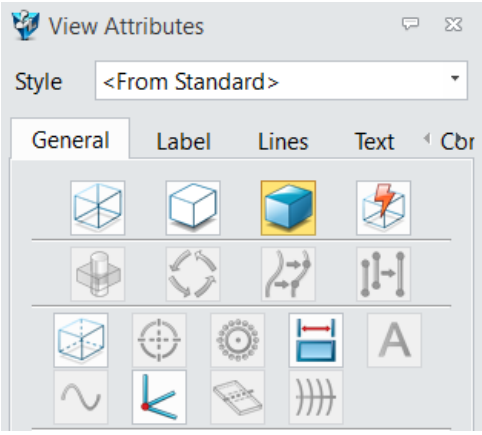

Figure 223: Select Shaded and Hide Hidden Lines

© Dream Technology System 2018
DTS Group Training Centres Location:
Singapore 2, Kallang Avenue #08-18 CT Hub, Singapore 339407
Johor Bahru Unit 07-04, Austin18, Jalan Austin Perdana 3, Taman Austin Perdana, 81100 Johor Bahru, Johor
Penang 1A-2-02 @ One Precinct (1337) Lengkok Mayang Pasir, 11900 Bayan Baru, Penang.
Kuala Lumpur 221, Block A, Kelana Center Point, Jalan SS7/19, 47301 Petaling Jaya, Selangor
info@dtsys.sg / info@dtsys.ny

20. **Final result obtained.**

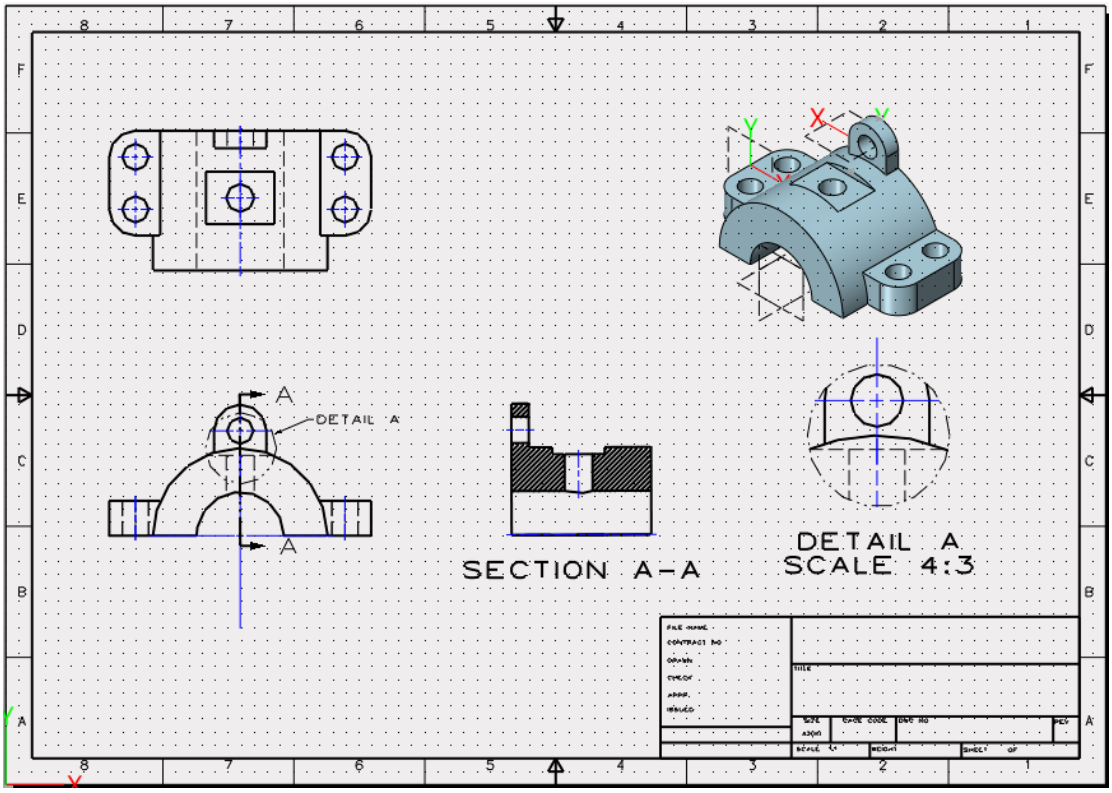

Figure 224: Final Result

The next section will use this Example to demonstrate how to create dimensions.

© Dream Technology System 2018
DTS Group Training Centres Location:
Singapore 2, Kallang Avenue #08-18 CT Hub, Singapore 339407
Johor Bahru Unit 07-04, Austin18, Jalan Austin Perdana 3, Taman Austin Perdana, 81100 Johor Bahru, Johor
Penang 1A-2-02 @ One Precinct (1337) Lengkok Mayang Pasir, 11900 Bayan Baru, Penang.
Kuala Lumpur 221, Block A, Kelana Center Point, Jalan SS7/19, 47301 Petaling Jaya, Selangor
info@dtsys.sg / info@dtsys.ny

Dimensions in 2D Drawings

1. Under **Dimension** ribbon tab, select **Dimension.**
2. Select **1st point** (From), **2nd point** (To) and **3rd point** (Location of dimension)
3. **Result:** Dimension is obtained.

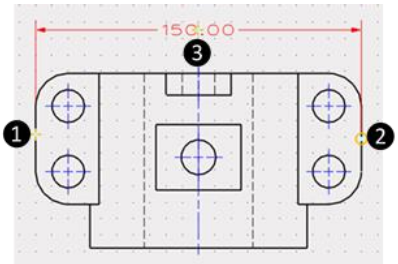

Figure 225: Dimension obtained

Example:

Try to achieve the following dimensions:

To achieve dimension 80.00, select point 4th, 5th and then 6th point.

To achieve dimension ⌀ 80.00, select point 7th then 8th point.

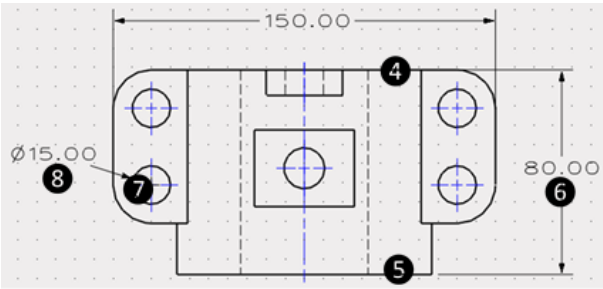

Figure 226: Dimension Example

Note:

It is also possible to first select the **Type of Dimension** before dimensioning.

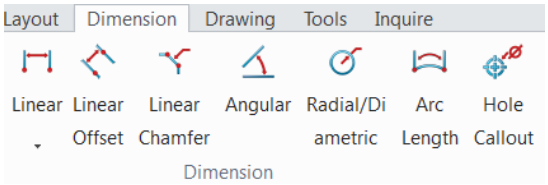

Figure 227: Types of Dimension

© Dream Technology System 2018
DTS Group Training Centres Location:
Singapore 2, Kallang Avenue #08-18 CT Hub, Singapore 339407
Johor Bahru Unit 07-04, Austin18, Jalan Austin Perdana 3, Taman Austin Perdana, 81100 Johor Bahru, Johor
Penang 1A-2-02 @ One Precinct (1337) Lengkok Mayang Pasir, 11900 Bayan Baru, Penang.
Kuala Lumpur 221, Block A, Kelana Center Point, Jalan SS7/19, 47301 Petaling Jaya, Selangor
info@dtsys.sg / info@dtsys.ny

Auto dimension

1. This use command to create dimensions automatically. Users only need to choose the view, and the entities type to create dimensions.
2. many different dimension types can be created with this command depending on the entities, points, and command options selected.

Example

1. Select Auto dimension command

2. Input required and select the origin

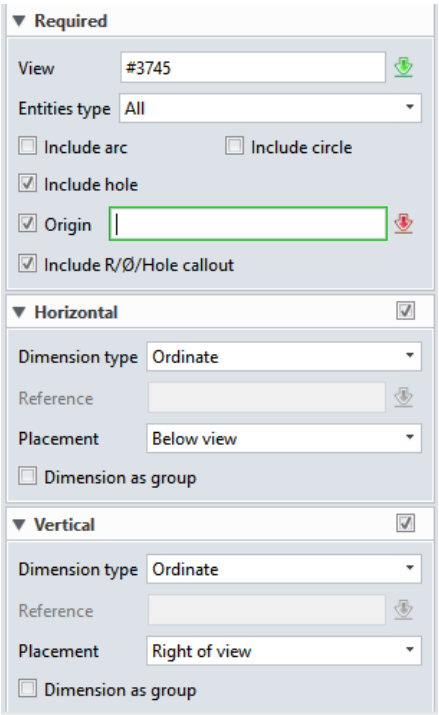

Figure 228 input required

© Dream Technology System 2018
DTS Group Training Centres Location:
Singapore 2, Kallang Avenue #08-18 CT Hub, Singapore 339407
Johor Bahru Unit 07-04, Austin18, Jalan Austin Perdana 3, Taman Austin Perdana, 81100 Johor Bahru, Johor
Penang 1A-2-02 @ One Precinct (1337) Lengkok Mayang Pasir, 11900 Bayan Baru, Penang.
Kuala Lumpur 221, Block A, Kelana Center Point, Jalan SS7/19, 47301 Petaling Jaya, Selangor
info@dtsys.sg / info@dtsys.ny

3. Result

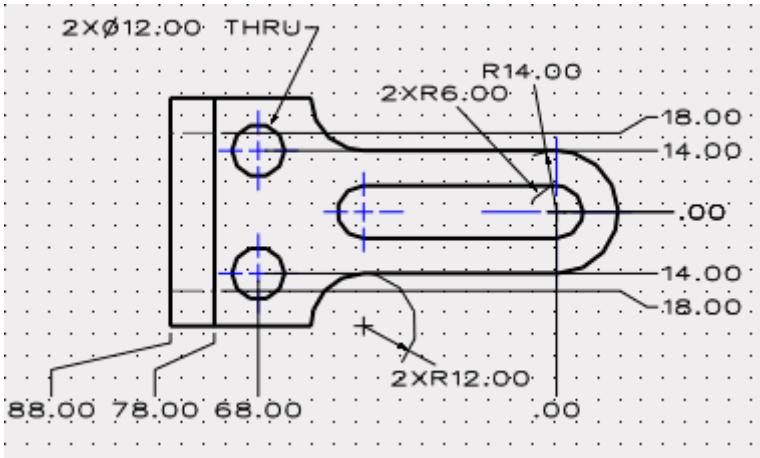

Figure229 Result

© Dream Technology System 2018
DTS Group Training Centres Location:
Singapore 2, Kallang Avenue #08-18 CT Hub, Singapore 339407
Johor Bahru Unit 07-04, Austin18, Jalan Austin Perdana 3, Taman Austin Perdana, 81100 Johor Bahru, Johor
Penang 1A-2-02 @ One Precinct (1337) Lengkok Mayang Pasir, 11900 Bayan Baru, Penang.
Kuala Lumpur 221, Block A, Kelana Center Point, Jalan SS7/19, 47301 Petaling Jaya, Selangor
info@dtsys.sg / info@dtsys.ny

Bill of Materials (BOM Table)

1. Under **Layout** ribbon tab, select **BOM.**

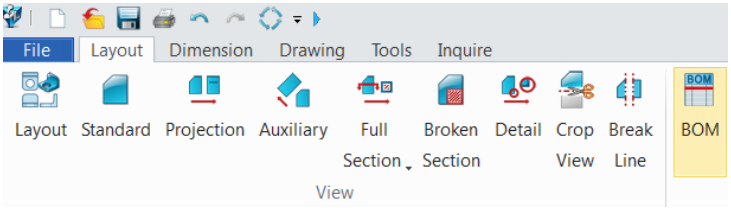

Figure 230: BOM icon

2. Select any view.

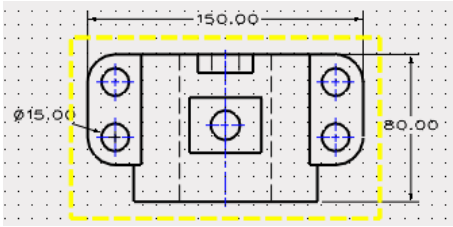

Figure 231: Select any view

3. Click **OK.**

4. Click on any preferred location to place the BOM Table. In this case select **1st point.**

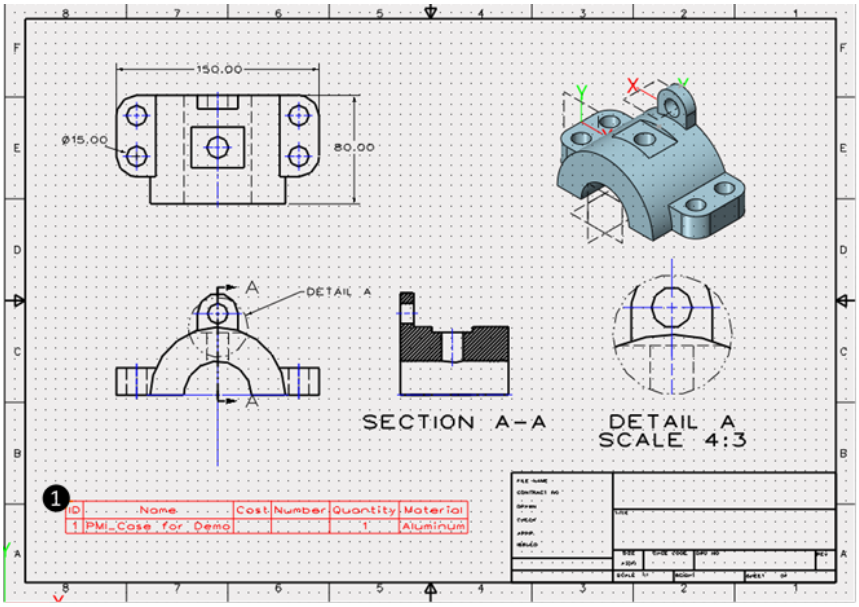

Figure 232: Position of BOM Table

© Dream Technology System 2018
DTS Group Training Centres Location:
Singapore 2, Kallang Avenue #08-18 CT Hub, Singapore 339407
Johor Bahru Unit 07-04, Austin18, Jalan Austin Perdana 3, Taman Austin Perdana, 81100 Johor Bahru, Johor
Penang 1A-2-02 @ One Precinct (1337) Lengkok Mayang Pasir, 11900 Bayan Baru, Penang.
Kuala Lumpur 221, Block A, Kelana Center Point, Jalan SS7/19, 47301 Petaling Jaya, Selangor
info@dtsys.sg / info@dtsys.ny

5. Click **OK.**

6. **Result:** BOM Table obatined.

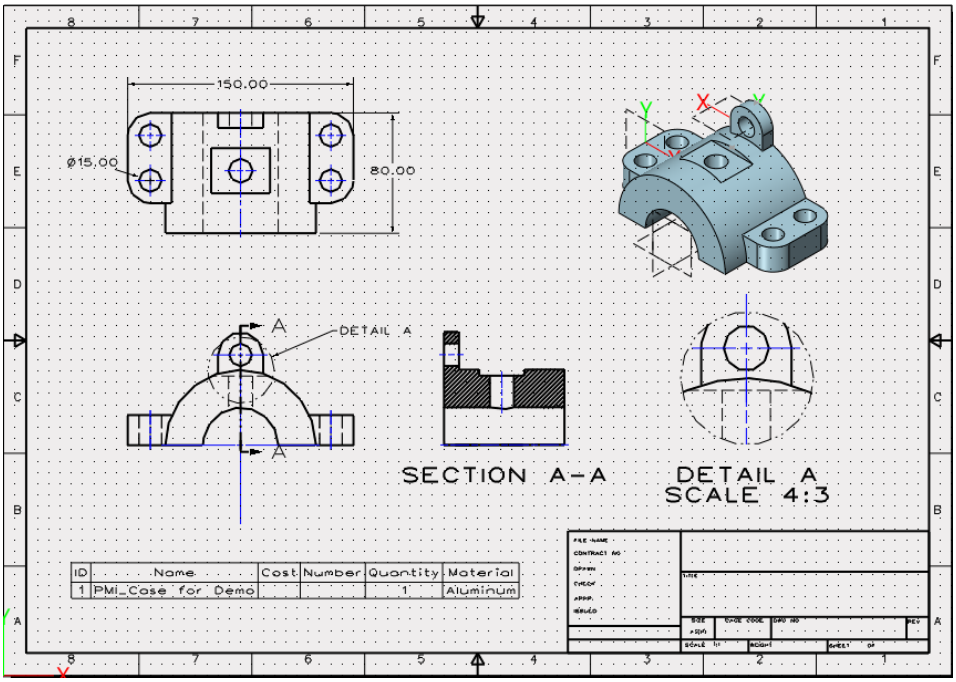

Figure 233: BOM Table

© Dream Technology System 2018
DTS Group Training Centres Location:
Singapore 2, Kallang Avenue #08-18 CT Hub, Singapore 339407
Johor Bahru Unit 07-04, Austin18, Jalan Austin Perdana 3, Taman Austin Perdana, 81100 Johor Bahru, Johor
Penang 1A-2-02 @ One Precinct (1337) Lengkok Mayang Pasir, 11900 Bayan Baru, Penang.
Kuala Lumpur 221, Block A, Kelana Center Point, Jalan SS7/19, 47301 Petaling Jaya, Selangor
info@dtsys.sg / info@dtsys.ny

Adding Annotations

1. Under **Drawing** ribbon tab, select **Text.**

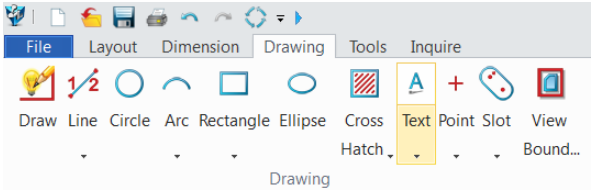

Figure 234: Text icon

2. Select a **location** to place text.
3. Input Text.
4. Input Text Attributes.

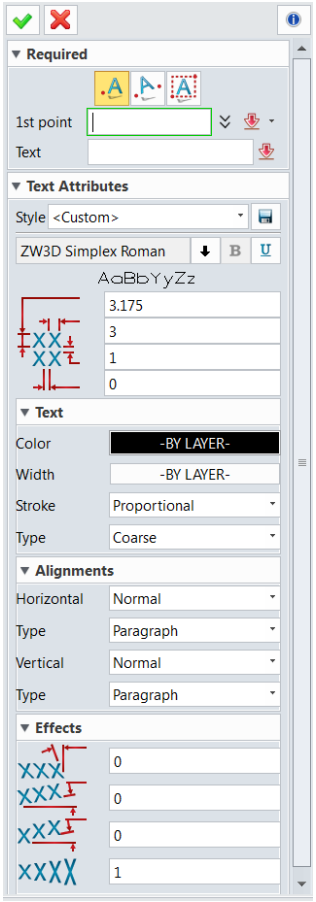

Figure 235: Text Attributes

5. Click **OK.**

© Dream Technology System 2018
DTS Group Training Centres Location:
Singapore 2, Kallang Avenue #08-18 CT Hub, Singapore 339407
Johor Bahru Unit 07-04, Austin18, Jalan Austin Perdana 3, Taman Austin Perdana, 81100 Johor Bahru, Johor
Penang 1A-2-02 @ One Precinct (1337) Lengkok Mayang Pasir, 11900 Bayan Baru, Penang.
Kuala Lumpur 221, Block A, Kelana Center Point, Jalan SS7/19, 47301 Petaling Jaya, Selangor
info@dtsys.sg / info@dtsys.ny

Lesson 6: Healing Open Edges

Purposes

This lesson introduces the different healing methods to fix open edges.

Objectives

Upon completion of the lesson, you will be able to:

- Analyse broken surfaces
- Fill gap
- Remove extra surfaces
- Do sewing on open edges
- Extend surfaces
- Remove trim surfaces
- Remove solid

© Dream Technology System 2018
DTS Group Training Centres Location:
Singapore 2, Kallang Avenue #08-18 CT Hub, Singapore 339407
Johor Bahru Unit 07-04, Austin18, Jalan Austin Perdana 3, Taman Austin Perdana, 81100 Johor Bahru, Johor
Penang 1A-2-02 @ One Precinct (1337) Lengkok Mayang Pasir, 11900 Bayan Baru, Penang.
Kuala Lumpur 221, Block A, Kelana Center Point, Jalan SS7/19, 47301 Petaling Jaya, Selangor
info@dtsys.sg / info@dtsys.ny

Healing Surfaces

ZW3D has the function to analyse and heal a variety of topology conditions including cracks, gaps, mismatched vertices and tiny edges.

- As shown in the model below, ZW3D shows open edge information to help identify tiny edges.
- With the heal function, it can quickly fill gaps with new surface and resolve the tiny edge issues.

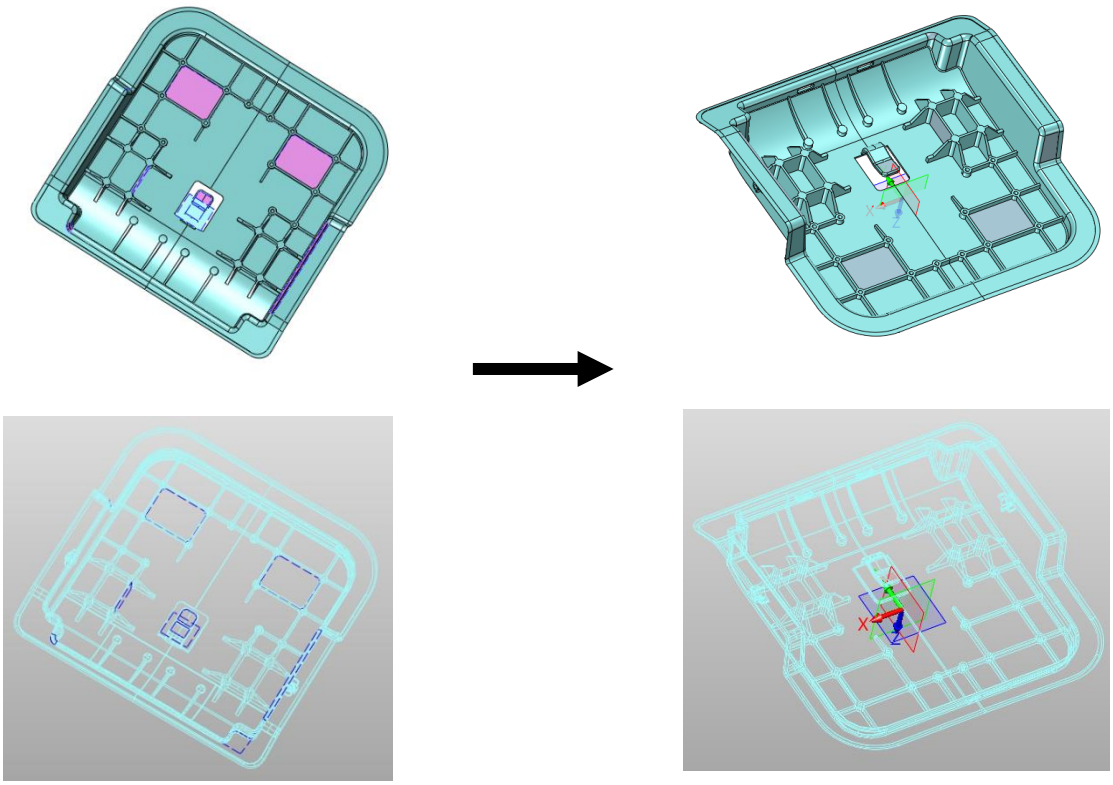

Figure 236: Healing Example

© Dream Technology System 2018
DTS Group Training Centres Location:
Singapore 2, Kallang Avenue #08-18 CT Hub, Singapore 339407
Johor Bahru Unit 07-04, Austin18, Jalan Austin Perdana 3, Taman Austin Perdana, 81100 Johor Bahru, Johor
Penang 1A-2-02 @ One Precinct (1337) Lengkok Mayang Pasir, 11900 Bayan Baru, Penang.
Kuala Lumpur 221, Block A, Kelana Center Point, Jalan SS7/19, 47301 Petaling Jaya, Selangor
info@dtsys.sg / info@dtsys.ny

For the following sections, we will be using **Healing1.Z3** as an example.

This summary help to locate the corresponding parts to their respective healing methods.

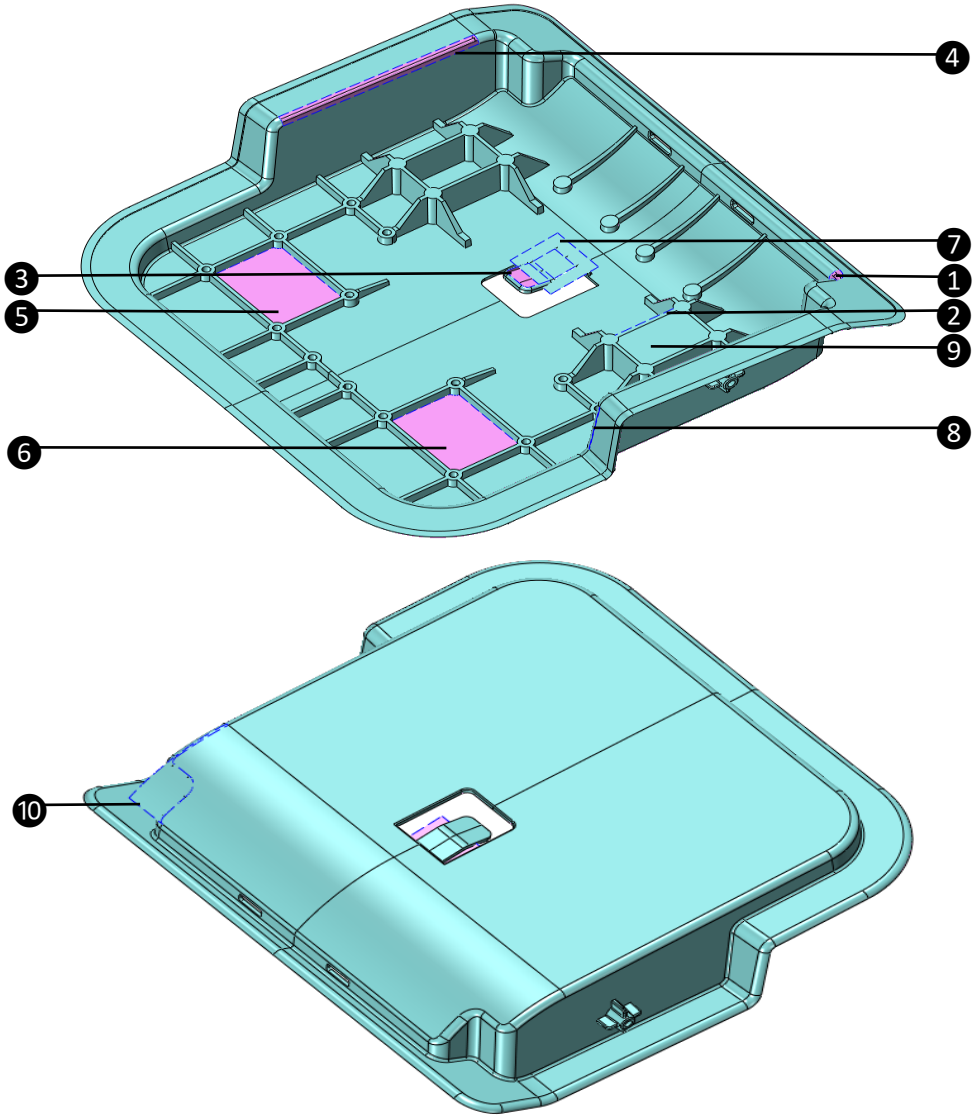

Figure 237: Healing Model Summary

Healing Method	**Part**
Fill Gap	❶❷❸❹❺❻
Remove Extra Surface	❼
Extend Surface	❽
Remove Trim Surfaces	❽❾❿
Remove Solid	❿

© Dream Technology System 2018
DTS Group Training Centres Location:
Singapore 2, Kallang Avenue #08-18 CT Hub, Singapore 339407
Johor Bahru Unit 07-04, Austin18, Jalan Austin Perdana 3, Taman Austin Perdana, 81100 Johor Bahru, Johor
Penang 1A-2-02 @ One Precinct (1337) Lengkok Mayang Pasir, 11900 Bayan Baru, Penang.
Kuala Lumpur 221, Block A, Kelana Center Point, Jalan SS7/19, 47301 Petaling Jaya, Selangor
info@dtsys.sg / info@dtsys.ny

Analyse Broken Surfaces

1. Open the part named **Healing1.Z3** inside **lite training** folder found on the Desktop.

2. Under **Heal** ribbon tab, select **Heal/Analyze.**

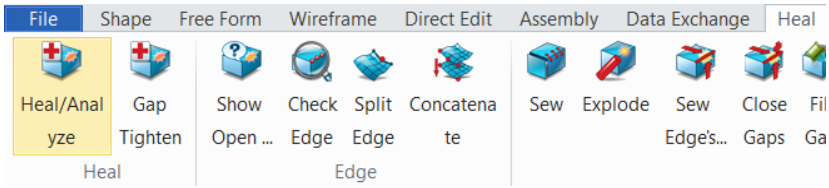

Figure 238:: Heal/Analyze icon

3. Select either **Heal** or **Analyze**. This does not matter as it is possible to switch between these two functions afterwards.

Heal
Analyze

4. Select **Shape.**

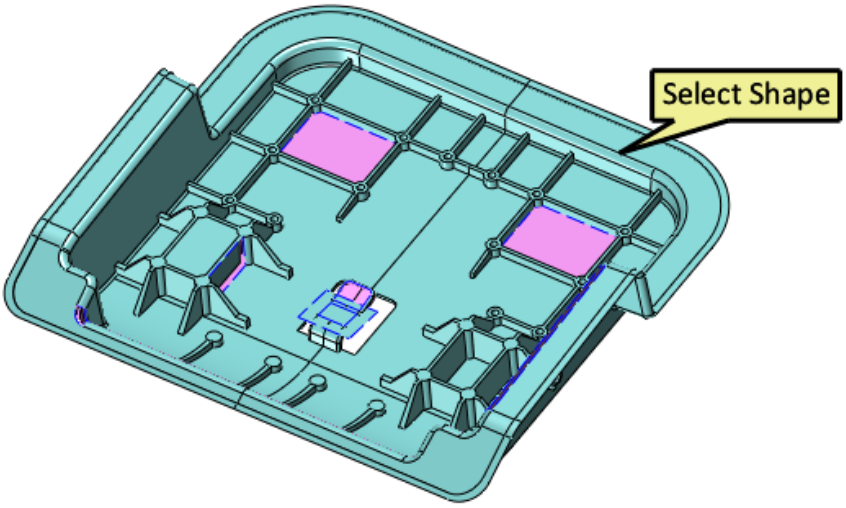

Figure 239: Select Shape

© Dream Technology System 2018
DTS Group Training Centres Location:
Singapore 2, Kallang Avenue #08-18 CT Hub, Singapore 339407
Johor Bahru Unit 07-04, Austin18, Jalan Austin Perdana 3, Taman Austin Perdana, 81100 Johor Bahru, Johor
Penang 1A-2-02 @ One Precinct (1337) Lengkok Mayang Pasir, 11900 Bayan Baru, Penang.
Kuala Lumpur 221, Block A, Kelana Center Point, Jalan SS7/19, 47301 Petaling Jaya, Selangor
info@dtsys.sg / info@dtsys.ny

5. Click **OK.**

6. **Result:** Healing results obtained.

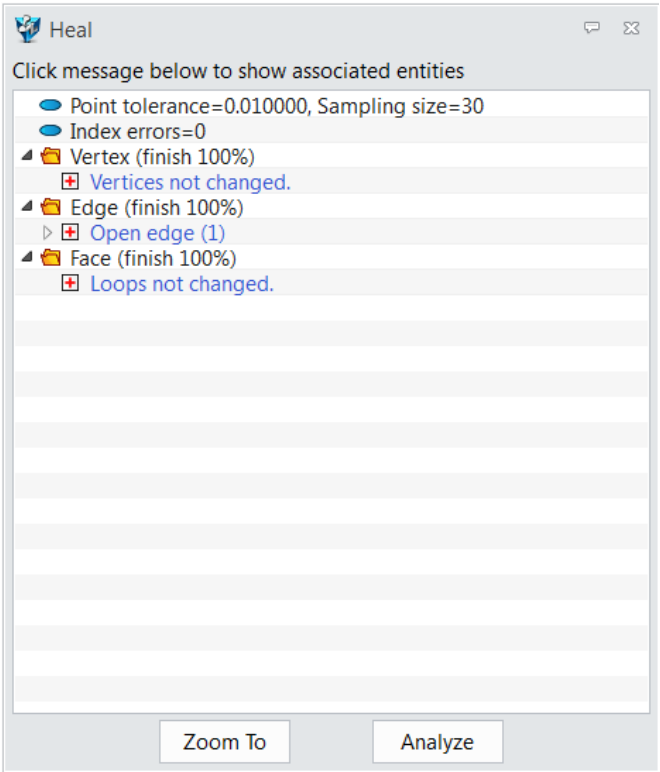

Figure 240: Healing Results

Note:

- Click **Analyze** to toggle between Analyse and Heal mode (Refer to **Step 3**).
- Click on **Zoom To** to zoom into the broken surface area.

© Dream Technology System 2018
DTS Group Training Centres Location:
Singapore 2, Kallang Avenue #08-18 CT Hub, Singapore 339407
Johor Bahru Unit 07-04, Austin18, Jalan Austin Perdana 3, Taman Austin Perdana, 81100 Johor Bahru, Johor
Penang 1A-2-02 @ One Precinct (1337) Lengkok Mayang Pasir, 11900 Bayan Baru, Penang.
Kuala Lumpur 221, Block A, Kelana Center Point, Jalan SS7/19, 47301 Petaling Jaya, Selangor
info@dtsys.sg / info@dtsys.ny

Alternatively,

1. Under **Heal** ribbon tab, select **Show open**.

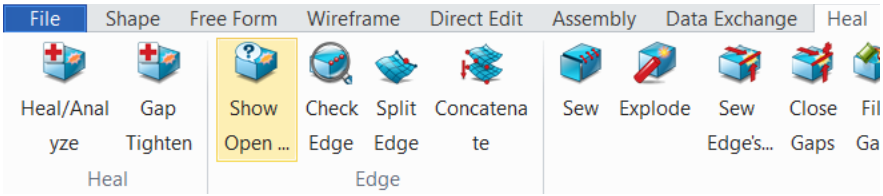

Figure 241: Show Open icon

2. **Result:** The number of open edges to be healed will be shown.

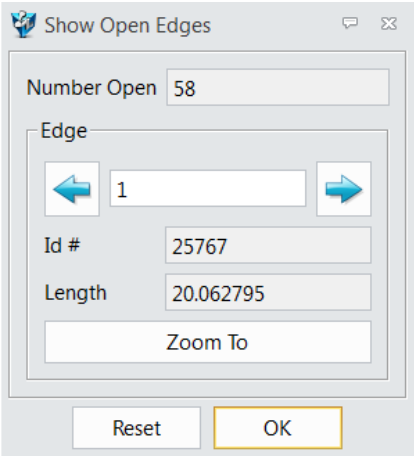

Figure 242: Number of open edges

Note:

- Click on to go the next open edge.
- Click on **Zoom To** to zoom into the broken surface area.
- After healing the entire model, it is advisable to use **Show Open** again to check that **Number Open** is 0.

© Dream Technology System 2018
DTS Group Training Centres Location:
Singapore 2, Kallang Avenue #08-18 CT Hub, Singapore 339407
Johor Bahru Unit 07-04, Austin18, Jalan Austin Perdana 3, Taman Austin Perdana, 81100 Johor Bahru, Johor
Penang 1A-2-02 @ One Precinct (1337) Lengkok Mayang Pasir, 11900 Bayan Baru, Penang.
Kuala Lumpur 221, Block A, Kelana Center Point, Jalan SS7/19, 47301 Petaling Jaya, Selangor
info@dtsys.sg / info@dtsys.ny

Fill Gap

1. Under **Heal** ribbon tab, select **Fill Gap**.

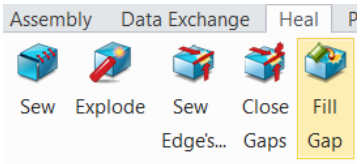

Figure 243:Fill Gap icon

2. Select **any one** of the broken edges (blue dotted lines)**.**

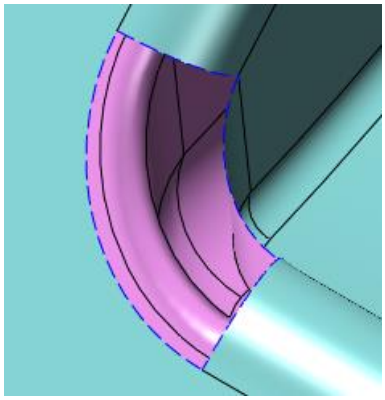

Figure 244: Broken edges

3. Click **OK.**

4. **Result:** The gap is filled. The colour changes from pink to grey, and the blue dotted lines changes into black solid lines.

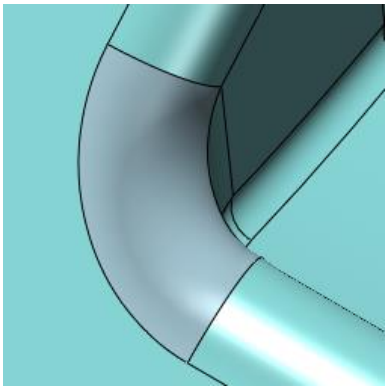

Figure 245: Gap filled

Example:

© Dream Technology System 2018
DTS Group Training Centres Location:
Singapore 2, Kallang Avenue #08-18 CT Hub, Singapore 339407
Johor Bahru Unit 07-04, Austin18, Jalan Austin Perdana 3, Taman Austin Perdana, 81100 Johor Bahru, Johor
Penang 1A-2-02 @ One Precinct (1337) Lengkok Mayang Pasir, 11900 Bayan Baru, Penang.
Kuala Lumpur 221, Block A, Kelana Center Point, Jalan SS7/19, 47301 Petaling Jaya, Selangor
info@dtsys.sg / info@dtsys.ny

Try to heal the following using **Fill Gap**:

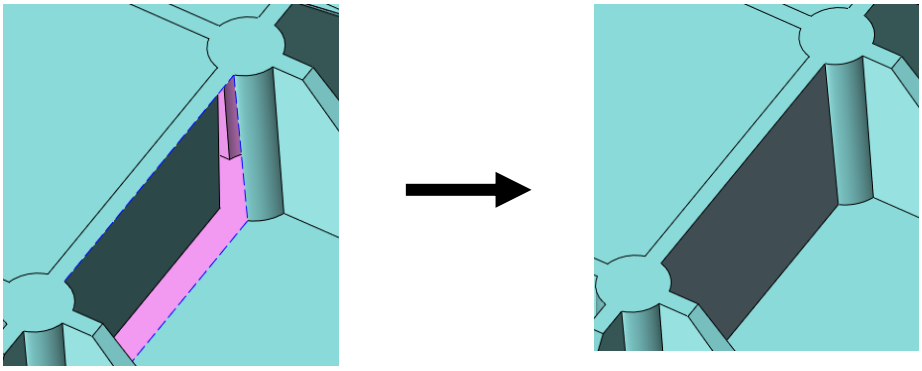

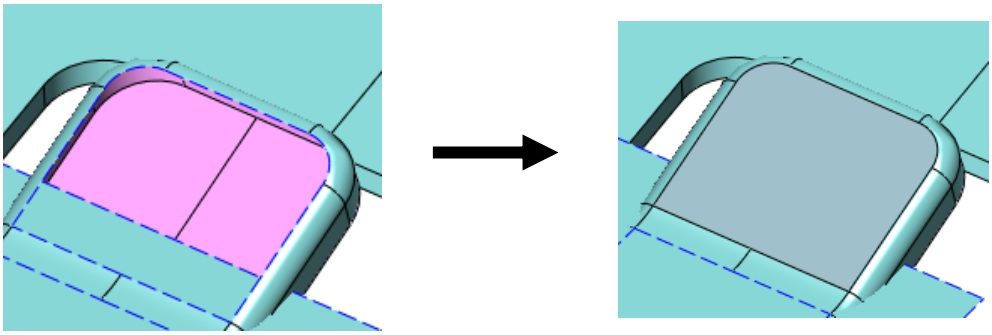

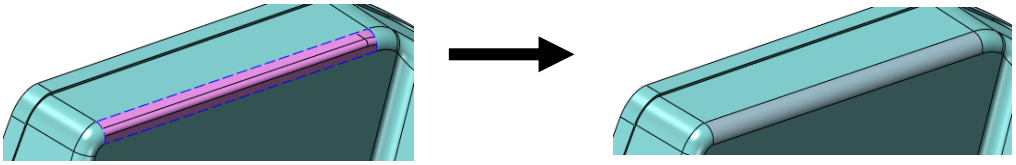

© Dream Technology System 2018
DTS Group Training Centres Location:
Singapore 2, Kallang Avenue #08-18 CT Hub, Singapore 339407
Johor Bahru Unit 07-04, Austin18, Jalan Austin Perdana 3, Taman Austin Perdana, 81100 Johor Bahru, Johor
Penang 1A-2-02 @ One Precinct (1337) Lengkok Mayang Pasir, 11900 Bayan Baru, Penang.
Kuala Lumpur 221, Block A, Kelana Center Point, Jalan SS7/19, 47301 Petaling Jaya, Selangor
info@dtsys.sg / info@dtsys.ny

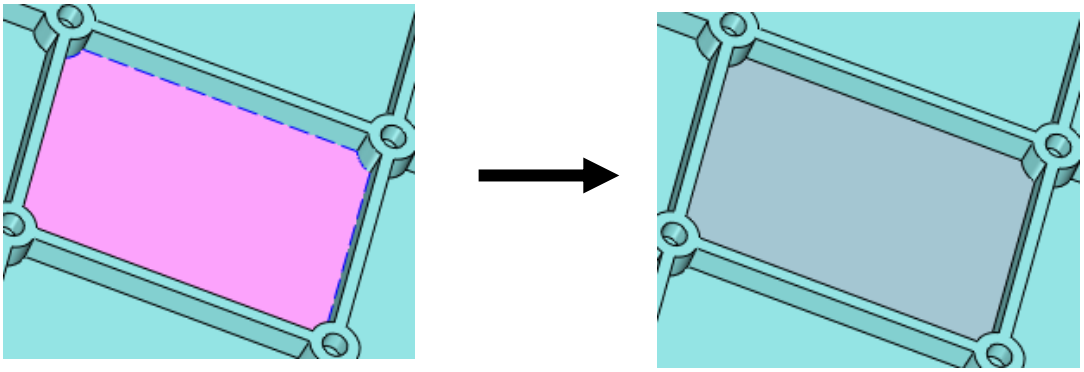

Figure 246: Healing Examples

Note:

For the last example, it is possible to encounter an error as seen in the following:

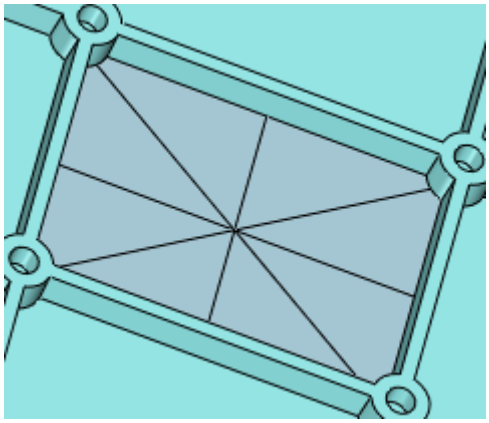

Figure 247: Healing Troubleshoot

This means that the part is **not** healed correctly since it is not a smooth surface.

This is because the edge selected in **Step 2** is not a pure straight line (i.e. there may be unnoticeable slight crookedness in certain parts).

Therefore, to achieve the result as shown in the previous page, select **another edge** that is surrounding the gap.

© Dream Technology System 2018
DTS Group Training Centres Location:
Singapore 2, Kallang Avenue #08-18 CT Hub, Singapore 339407
Johor Bahru Unit 07-04, Austin18, Jalan Austin Perdana 3, Taman Austin Perdana, 81100 Johor Bahru, Johor
Penang 1A-2-02 @ One Precinct (1337) Lengkok Mayang Pasir, 11900 Bayan Baru, Penang.
Kuala Lumpur 221, Block A, Kelana Center Point, Jalan SS7/19, 47301 Petaling Jaya, Selangor
info@dtsys.sg / info@dtsys.ny

Remove Extra Surfaces

1. Under **Heal** ribbon tab, select **Spilt with Curves**.

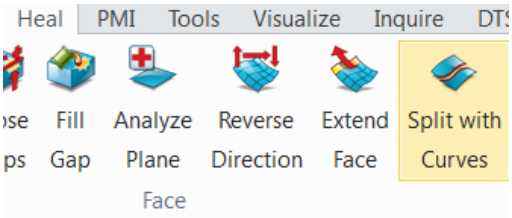

Figure 248: Split with Curves icon

2. Select the **Faces.** (1 surface to pick)

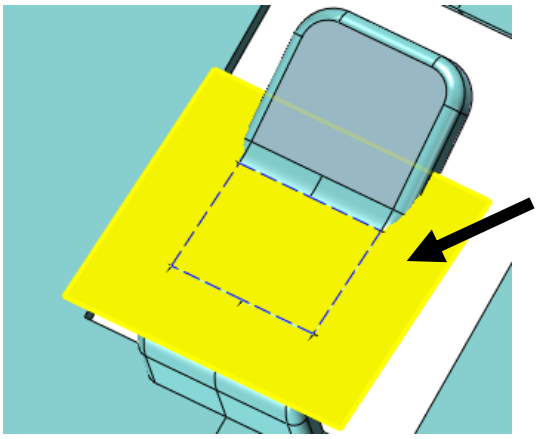

Figure 249: Select Face

3. Select the **Curves**. (6 curves to pick)

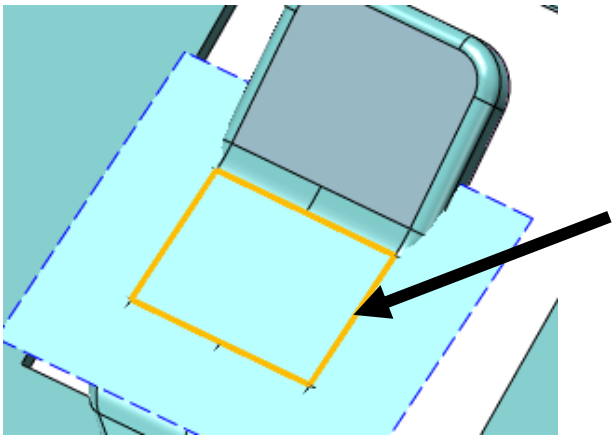

Figure 250: Select Curves

4. Click **OK.**

© Dream Technology System 2018
DTS Group Training Centres Location:
Singapore 2, Kallang Avenue #08-18 CT Hub, Singapore 339407
Johor Bahru Unit 07-04, Austin18, Jalan Austin Perdana 3, Taman Austin Perdana, 81100 Johor Bahru, Johor
Penang 1A-2-02 @ One Precinct (1337) Lengkok Mayang Pasir, 11900 Bayan Baru, Penang.
Kuala Lumpur 221, Block A, Kelana Center Point, Jalan SS7/19, 47301 Petaling Jaya, Selangor
info@dtsys.sg / info@dtsys.ny

This creates a separation of the surfaces along the chosen curve.

5. Select the surface to remove.

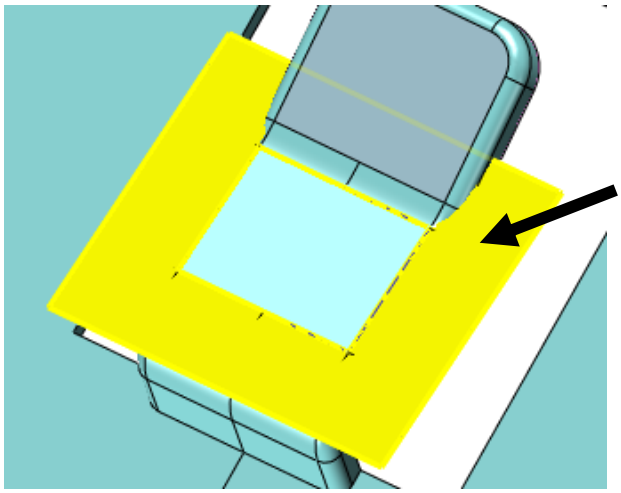

Figure 251: Select surface to remove

6. Press the **delete** button on the keyboard.
7. **Result:** Unwanted surface area removed.

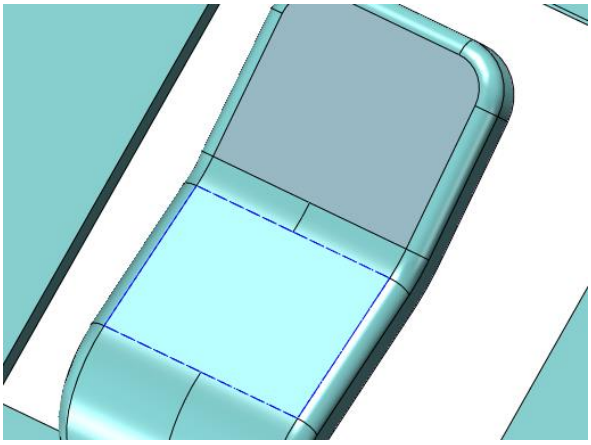

Figure 252: Remove Surface Result

Note:

Blue dotted lines are observed. **Sewing** is required. This will be taught in the next section.

© Dream Technology System 2018
DTS Group Training Centres Location:
Singapore 2, Kallang Avenue #08-18 CT Hub, Singapore 339407
Johor Bahru Unit 07-04, Austin18, Jalan Austin Perdana 3, Taman Austin Perdana, 81100 Johor Bahru, Johor
Penang 1A-2-02 @ One Precinct (1337) Lengkok Mayang Pasir, 11900 Bayan Baru, Penang.
Kuala Lumpur 221, Block A, Kelana Center Point, Jalan SS7/19, 47301 Petaling Jaya, Selangor
info@dtsys.sg / info@dtsys.ny

Sewing Surfaces

1. Under **Heal** ribbon tab, select **Sew.**

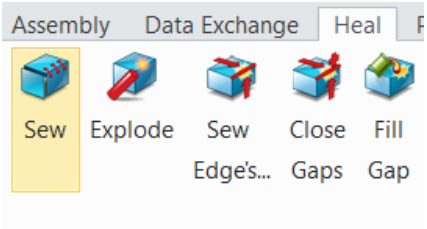

Figure 253: Sew icon

2. Select the **Faces.** (2 picked)

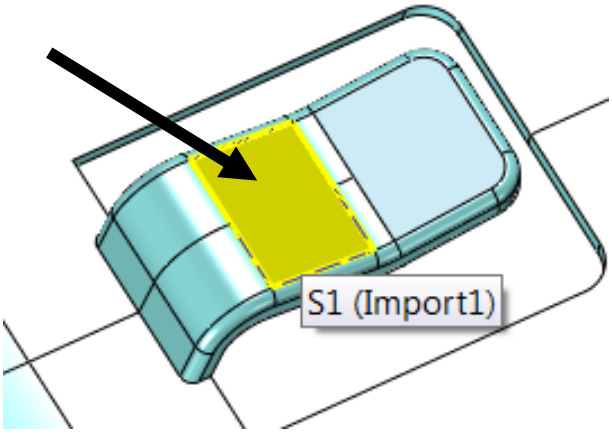

Figure 254: Select 1st Face

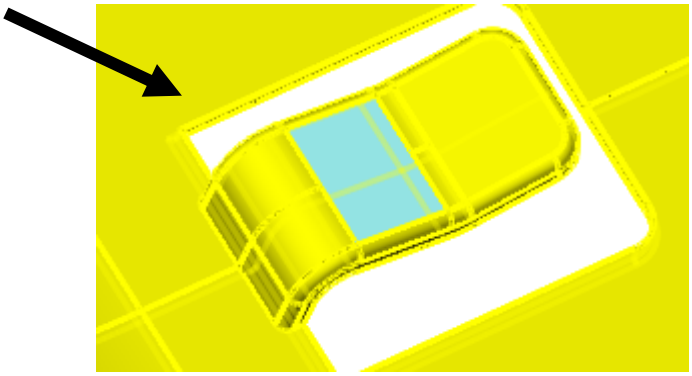

Figure 255: Select second face

© Dream Technology System 2018
DTS Group Training Centres Location:
Singapore 2, Kallang Avenue #08-18 CT Hub, Singapore 339407
Johor Bahru Unit 07-04, Austin18, Jalan Austin Perdana 3, Taman Austin Perdana, 81100 Johor Bahru, Johor
Penang 1A-2-02 @ One Precinct (1337) Lengkok Mayang Pasir, 11900 Bayan Baru, Penang.
Kuala Lumpur 221, Block A, Kelana Center Point, Jalan SS7/19, 47301 Petaling Jaya, Selangor
info@dtsys.sg / info@dtsys.ny

3. Click **OK.**

   If a pop-up message appears, click **Continue.**

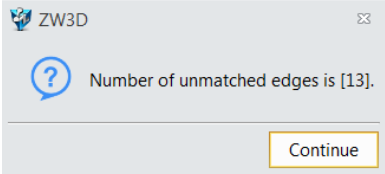

Figure 256: Click continue

4. **Result**: Broken edges are sewn. Blue dotted lines become black solid lines.

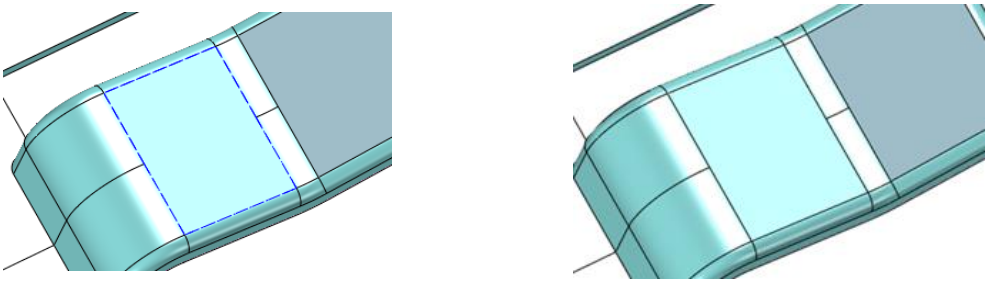

Before **After**

Figure 257: Sewing Result

© Dream Technology System 2018
DTS Group Training Centres Location:
Singapore 2, Kallang Avenue #08-18 CT Hub, Singapore 339407
Johor Bahru Unit 07-04, Austin18, Jalan Austin Perdana 3, Taman Austin Perdana, 81100 Johor Bahru, Johor
Penang 1A-2-02 @ One Precinct (1337) Lengkok Mayang Pasir, 11900 Bayan Baru, Penang.
Kuala Lumpur 221, Block A, Kelana Center Point, Jalan SS7/19, 47301 Petaling Jaya, Selangor
info@dtsys.sg / info@dtsys.ny

Extend Surfaces

1. Under **Heal** ribbon tab, select **Extend Face.**

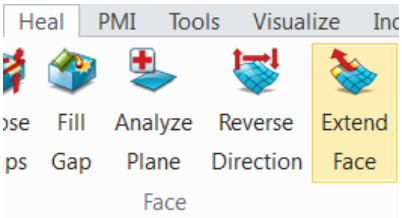

Figure 258: Extend Face

2. Select **Face.** (1 picked)

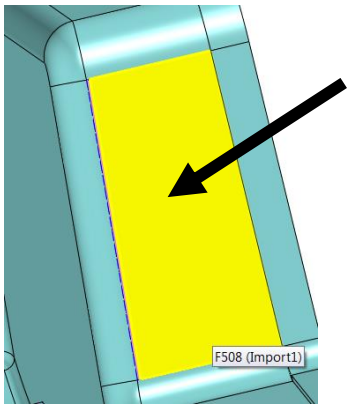

Figure 259: Select Face

3. Select **Edges.** (1 picked)

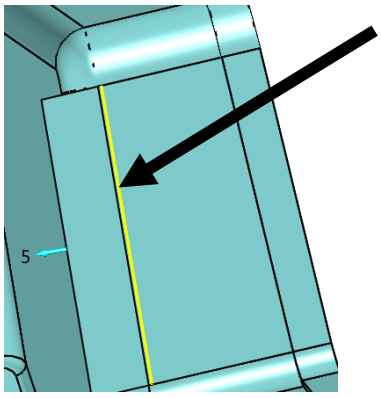

Figure 260: Insert Edge

© Dream Technology System 2018
DTS Group Training Centres Location:
Singapore 2, Kallang Avenue #08-18 CT Hub, Singapore 339407
Johor Bahru Unit 07-04, Austin18, Jalan Austin Perdana 3, Taman Austin Perdana, 81100 Johor Bahru, Johor
Penang 1A-2-02 @ One Precinct (1337) Lengkok Mayang Pasir, 11900 Bayan Baru, Penang.
Kuala Lumpur 221, Block A, Kelana Center Point, Jalan SS7/19, 47301 Petaling Jaya, Selangor
info@dtsys.sg / info@dtsys.ny

4. Input an estimated **Distance** value (enough to cover the gap).

   In this case, input an estimated value of 5.

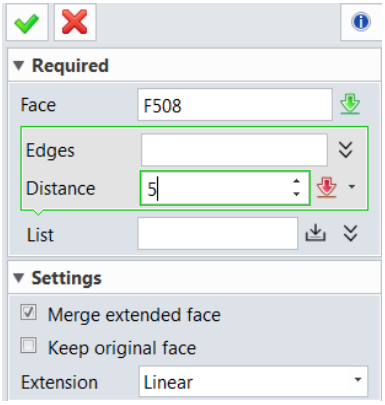

Figure 261: Input Distance Value

5. Click **OK.**

6. **Result:** Surface extended.

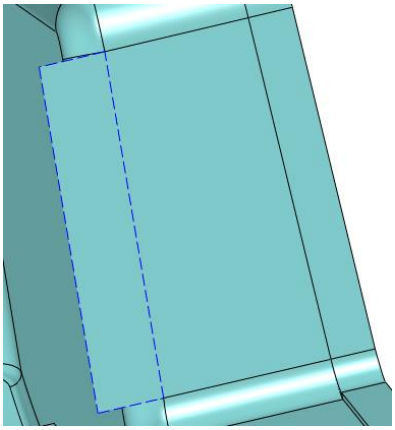

Figure 262: Extend Surface Result

Note:

Blue dotted lines are observed. **Trimming** is required. This will be taught in the next section.

© Dream Technology System 2018
DTS Group Training Centres Location:
Singapore 2, Kallang Avenue #08-18 CT Hub, Singapore 339407
Johor Bahru Unit 07-04, Austin18, Jalan Austin Perdana 3, Taman Austin Perdana, 81100 Johor Bahru, Johor
Penang 1A-2-02 @ One Precinct (1337) Lengkok Mayang Pasir, 11900 Bayan Baru, Penang.
Kuala Lumpur 221, Block A, Kelana Center Point, Jalan SS7/19, 47301 Petaling Jaya, Selangor
info@dtsys.sg / info@dtsys.ny

Remove Trim Surfaces

1. Under **Free Form** ribbon tab, select **Trim to Curves.**

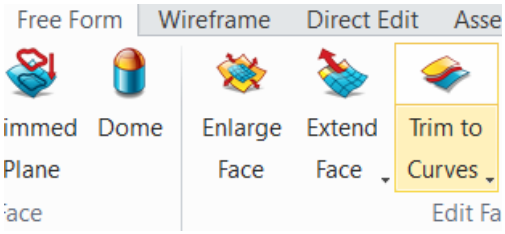

Figure 263: Trim to Curves icon

2. Select **Faces.** (1 picked)

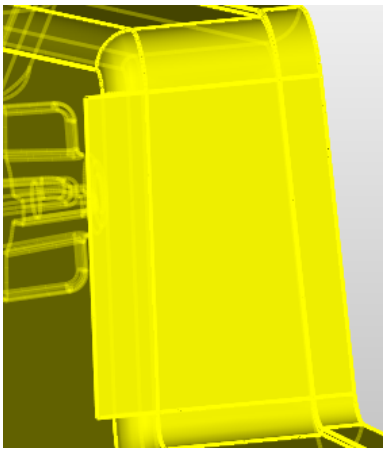

Figure 264: Select Faces

3. Select **Curves.** (1 picked)

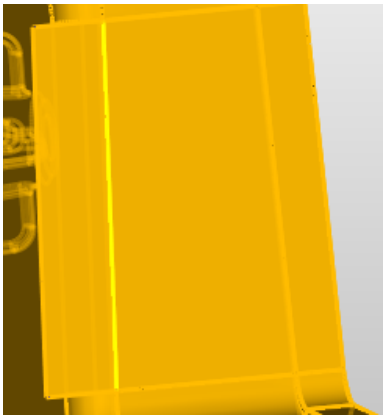

Figure 265: Select Face

4. Select **Sides.** (1 picked)

© Dream Technology System 2018
DTS Group Training Centres Location:
Singapore 2, Kallang Avenue #08-18 CT Hub, Singapore 339407
Johor Bahru Unit 07-04, Austin18, Jalan Austin Perdana 3, Taman Austin Perdana, 81100 Johor Bahru, Johor
Penang 1A-2-02 @ One Precinct (1337) Lengkok Mayang Pasir, 11900 Bayan Baru, Penang.
Kuala Lumpur 221, Block A, Kelana Center Point, Jalan SS7/19, 47301 Petaling Jaya, Selangor
info@dtsys.sg / info@dtsys.ny

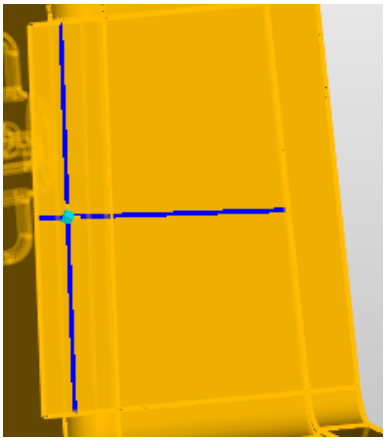

Figure 266: Insert Sides

Note:

Select **Faces to remove** if the **Side** selected is to be **removed.**

Select **Faces to keep** if the **Side** selected is to **keep**.

5. Click **OK.**
6. **Result**: Surface is trimmed.

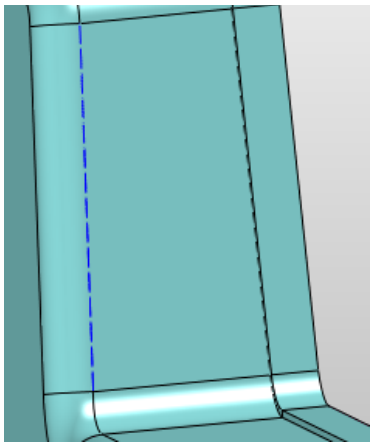

Figure 267: Surface is trimmed

Note:

Blue dotted lines are observed. **Sewing** is required. Recall previous section on **Sewing Surfaces.**

© Dream Technology System 2018
DTS Group Training Centres Location:
Singapore 2, Kallang Avenue #08-18 CT Hub, Singapore 339407
Johor Bahru Unit 07-04, Austin18, Jalan Austin Perdana 3, Taman Austin Perdana, 81100 Johor Bahru, Johor
Penang 1A-2-02 @ One Precinct (1337) Lengkok Mayang Pasir, 11900 Bayan Baru, Penang.
Kuala Lumpur 221, Block A, Kelana Center Point, Jalan SS7/19, 47301 Petaling Jaya, Selangor
info@dtsys.sg / info@dtsys.ny

Example 1:

Try removing this extra surface:

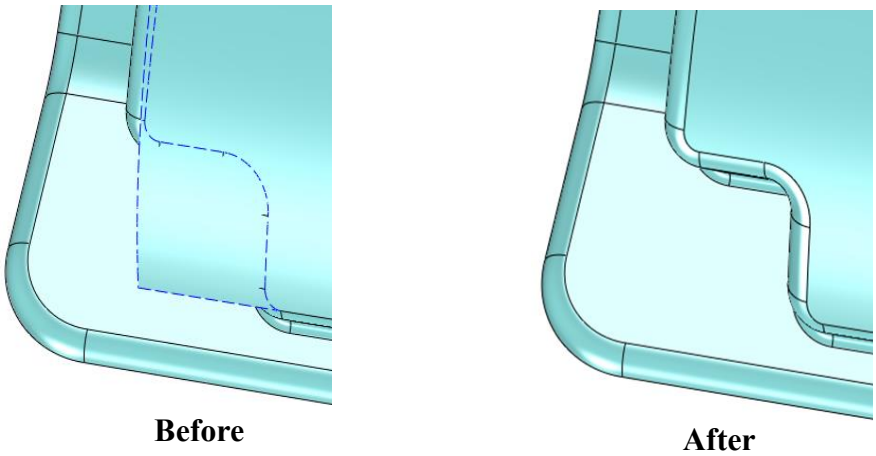

Figure 268: Remove Surface Example 1

Hint:

1. Under **Free Form** ribbon tab, select **Trim to Curves.**
2. Select **Faces.** (1 picked)

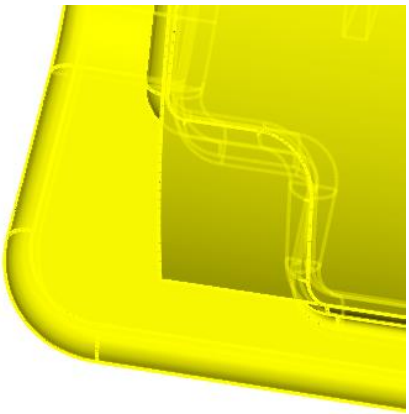

Figure 269: Select Faces

© Dream Technology System 2018
DTS Group Training Centres Location:
Singapore 2, Kallang Avenue #08-18 CT Hub, Singapore 339407
Johor Bahru Unit 07-04, Austin18, Jalan Austin Perdana 3, Taman Austin Perdana, 81100 Johor Bahru, Johor
Penang 1A-2-02 @ One Precinct (1337) Lengkok Mayang Pasir, 11900 Bayan Baru, Penang.
Kuala Lumpur 221, Block A, Kelana Center Point, Jalan SS7/19, 47301 Petaling Jaya, Selangor
info@dtsys.sg / info@dtsys.ny

3. Select **Curves** (7 picked).

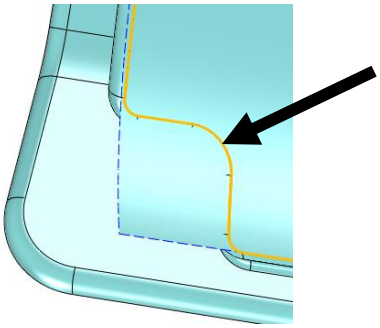

Figure 270: Select Curves

4. Select **Sides.** (1 picked)

   In this case, select **Face to remove.**

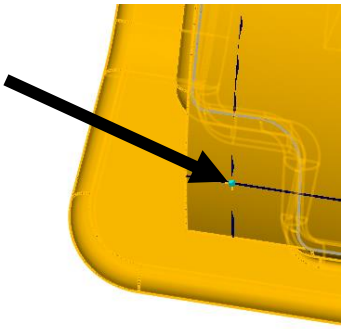

Figure 271: Select Sides

5. Click **OK.**

6. **Result:** Extra surface is removed.

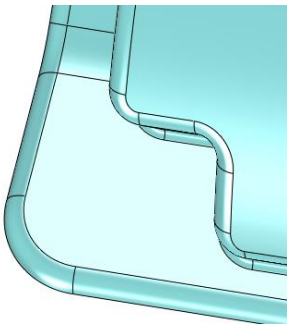

Figure 272: remove Surface Result

© Dream Technology System 2018
DTS Group Training Centres Location:
Singapore 2, Kallang Avenue #08-18 CT Hub, Singapore 339407
Johor Bahru Unit 07-04, Austin18, Jalan Austin Perdana 3, Taman Austin Perdana, 81100 Johor Bahru, Johor
Penang 1A-2-02 @ One Precinct (1337) Lengkok Mayang Pasir, 11900 Bayan Baru, Penang.
Kuala Lumpur 221, Block A, Kelana Center Point, Jalan SS7/19, 47301 Petaling Jaya, Selangor
info@dtsys.sg / info@dtsys.ny

Example 2:

Try removing this top surface:

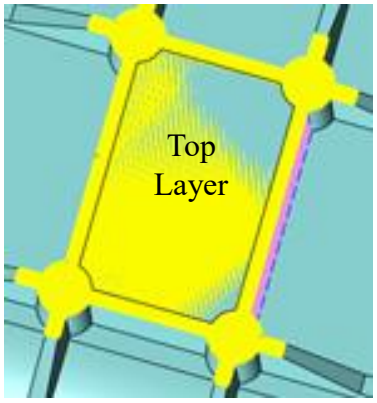

Before

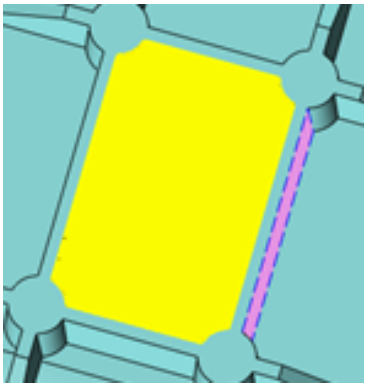

After

Figure 273: Remove Surface Example 2

Hint:

1. Under **Free Form** ribbon tab, select **Trim to Curves.**
2. Select **Faces.** (1 picked)

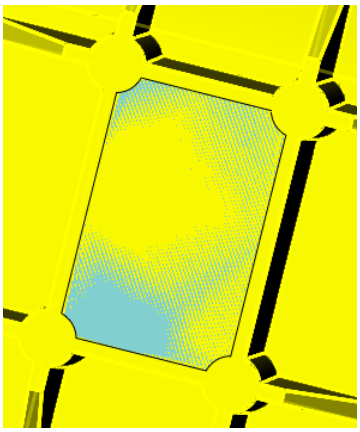

Figure 274: Select Face

© Dream Technology System 2018
DTS Group Training Centres Location:
Singapore 2, Kallang Avenue #08-18 CT Hub, Singapore 339407
Johor Bahru Unit 07-04, Austin18, Jalan Austin Perdana 3, Taman Austin Perdana, 81100 Johor Bahru, Johor
Penang 1A-2-02 @ One Precinct (1337) Lengkok Mayang Pasir, 11900 Bayan Baru, Penang.
Kuala Lumpur 221, Block A, Kelana Center Point, Jalan SS7/19, 47301 Petaling Jaya, Selangor
info@dtsys.sg / info@dtsys.ny

3. Select **Curves.** (8 picked)

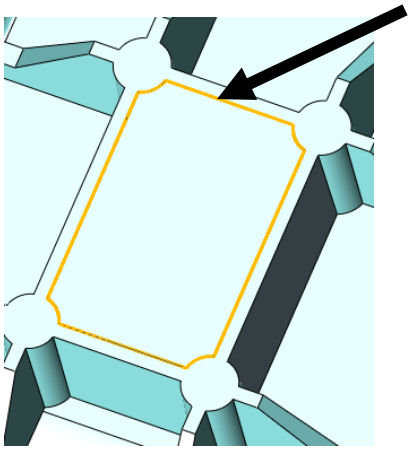

Figure 275: Select Curve

4. Select **Sides.** (1 picked)

   In this case, select **Face to remove.**

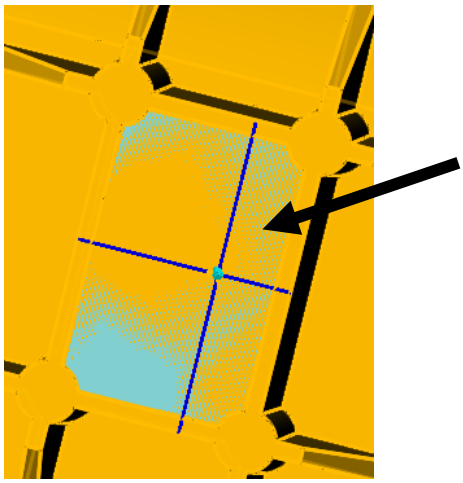

Figure 276: Select Sides

5. Click **OK.**

6. **Result:** Top layer is removed. Proceed on to remove the block underneath in the next section.

© Dream Technology System 2018
DTS Group Training Centres Location:
Singapore 2, Kallang Avenue #08-18 CT Hub, Singapore 339407
Johor Bahru Unit 07-04, Austin18, Jalan Austin Perdana 3, Taman Austin Perdana, 81100 Johor Bahru, Johor
Penang 1A-2-02 @ One Precinct (1337) Lengkok Mayang Pasir, 11900 Bayan Baru, Penang.
Kuala Lumpur 221, Block A, Kelana Center Point, Jalan SS7/19, 47301 Petaling Jaya, Selangor
info@dtsys.sg / info@dtsys.ny

Remove Solid

Continuing the previous example, this section will teach you how to remove solid.

There are two methods to remove a solid – **Combine** and **Explode.**

Combine:

1. Under **Shape** ribbon tab, select **Combine.**

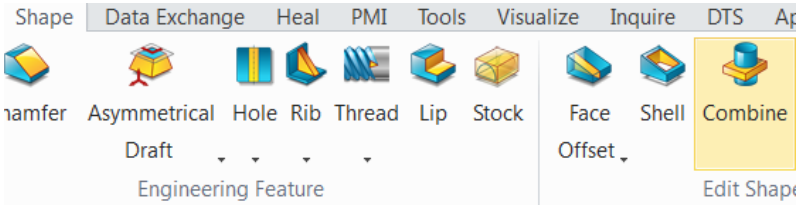

Figure 277: Select Combine

2. Select **Type of Operation.** In this case, we select **Remove.**

Add
Remove
Intersect

3. Select Base **(1 picked).**

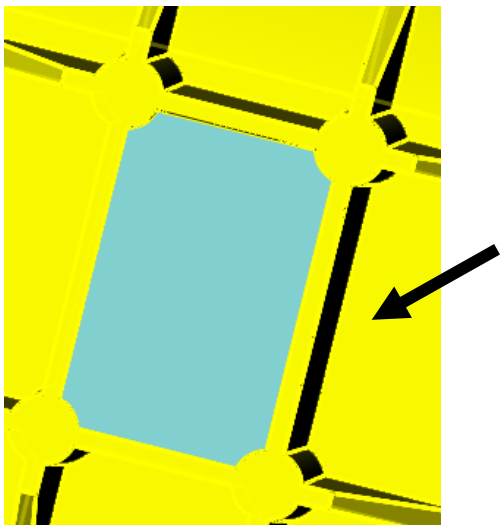

Figure 278: Select Base

© Dream Technology System 2018
DTS Group Training Centres Location:
Singapore 2, Kallang Avenue #08-18 CT Hub, Singapore 339407
Johor Bahru Unit 07-04, Austin18, Jalan Austin Perdana 3, Taman Austin Perdana, 81100 Johor Bahru, Johor
Penang 1A-2-02 @ One Precinct (1337) Lengkok Mayang Pasir, 11900 Bayan Baru, Penang.
Kuala Lumpur 221, Block A, Kelana Center Point, Jalan SS7/19, 47301 Petaling Jaya, Selangor
info@dtsys.sg / info@dtsys.ny

4. Select Operator **(1 picked).**

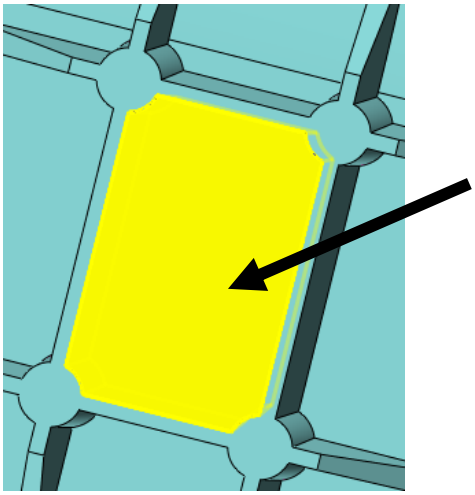

Figure 279: Select Operator

5. Click **OK.**

6. **Result:** Block is removed.

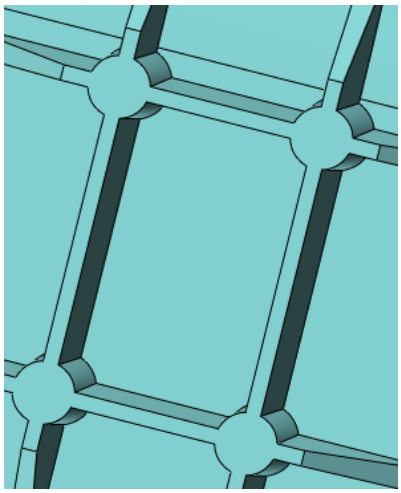

Figure 280: Block Removed

© Dream Technology System 2018
DTS Group Training Centres Location:
Singapore 2, Kallang Avenue #08-18 CT Hub, Singapore 339407
Johor Bahru Unit 07-04, Austin18, Jalan Austin Perdana 3, Taman Austin Perdana, 81100 Johor Bahru, Johor
Penang 1A-2-02 @ One Precinct (1337) Lengkok Mayang Pasir, 11900 Bayan Baru, Penang.
Kuala Lumpur 221, Block A, Kelana Center Point, Jalan SS7/19, 47301 Petaling Jaya, Selangor
info@dtsys.sg / info@dtsys.ny

Explode:

1. Under **Heal** ribbon tab, select **Explode.**
2. **Select Faces (1 picked).**

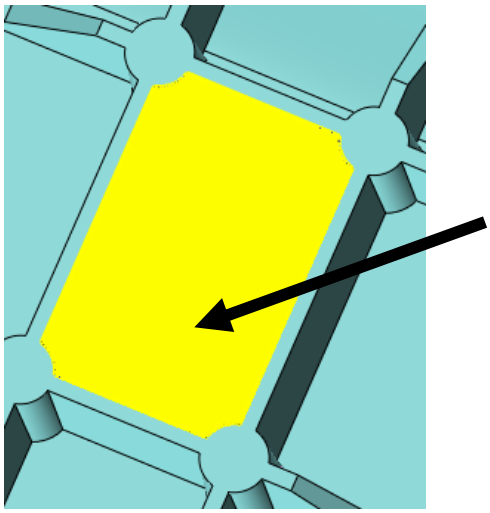

Figure 281: Select Faces

3. Click **OK.**
4. Click on the block to be removed.

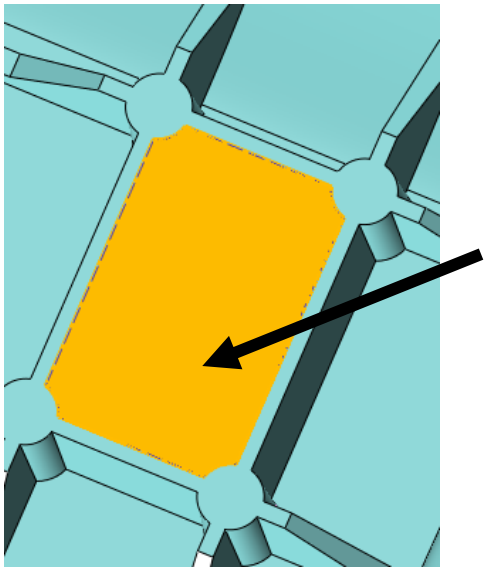

Figure 282: Block to be removed

© Dream Technology System 2018
DTS Group Training Centres Location:
Singapore 2, Kallang Avenue #08-18 CT Hub, Singapore 339407
Johor Bahru Unit 07-04, Austin18, Jalan Austin Perdana 3, Taman Austin Perdana, 81100 Johor Bahru, Johor
Penang 1A-2-02 @ One Precinct (1337) Lengkok Mayang Pasir, 11900 Bayan Baru, Penang.
Kuala Lumpur 221, Block A, Kelana Center Point, Jalan SS7/19, 47301 Petaling Jaya, Selangor
info@dtsys.sg / info@dtsys.ny

5. Press the **Delete** button on the keyboard.
6. **Result:** Block is removed.

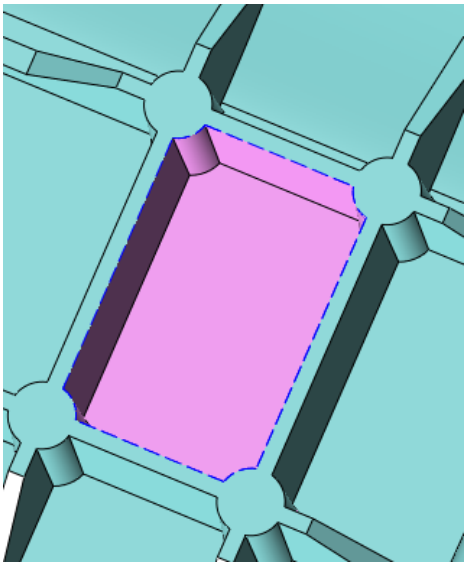

Figure 283: Block removed

Note:

Blue dotted lines are observed. **Sewing** is required. Recall previous section on **Sewing Surfaces.**

7. Select **Faces** (2 picked).

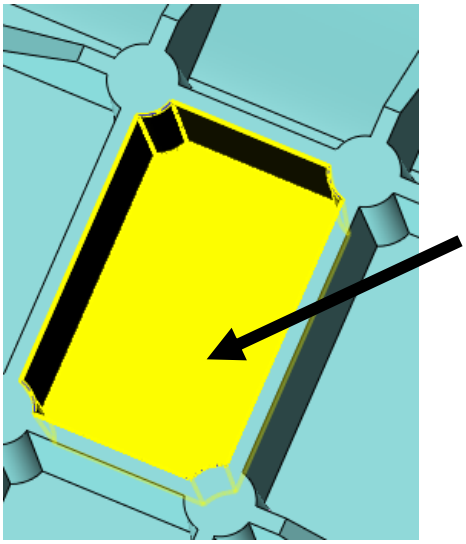

Figure 284: Select Face 1

© Dream Technology System 2018
DTS Group Training Centres Location:
Singapore 2, Kallang Avenue #08-18 CT Hub, Singapore 339407
Johor Bahru Unit 07-04, Austin18, Jalan Austin Perdana 3, Taman Austin Perdana, 81100 Johor Bahru, Johor
Penang 1A-2-02 @ One Precinct (1337) Lengkok Mayang Pasir, 11900 Bayan Baru, Penang.
Kuala Lumpur 221, Block A, Kelana Center Point, Jalan SS7/19, 47301 Petaling Jaya, Selangor
info@dtsys.sg / info@dtsys.ny

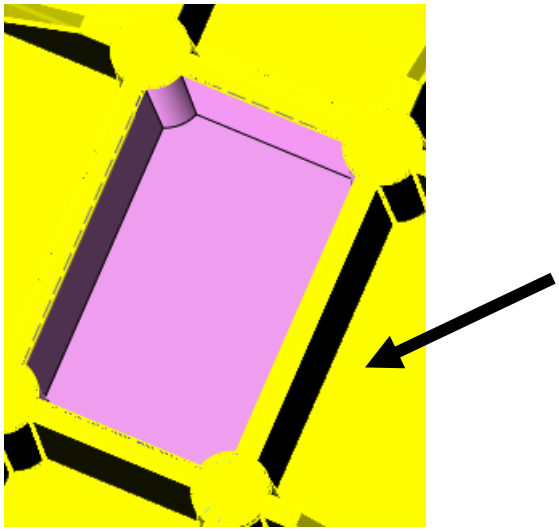

Figure 285: Select Face 2

8. Click **OK.**

9. **Result:** Broken edges are sewn.

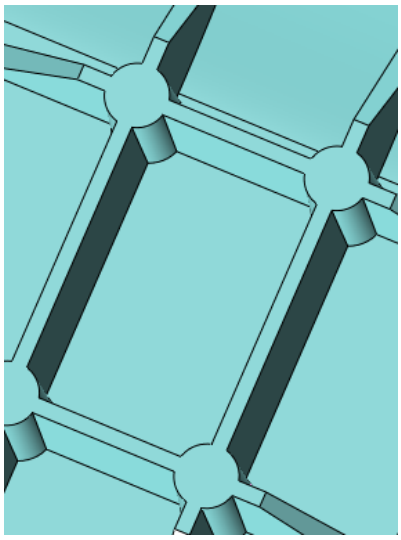

Figure 286: Broken Edge Sewn

© Dream Technology System 2018
DTS Group Training Centres Location:
Singapore 2, Kallang Avenue #08-18 CT Hub, Singapore 339407
Johor Bahru Unit 07-04, Austin18, Jalan Austin Perdana 3, Taman Austin Perdana, 81100 Johor Bahru, Johor
Penang 1A-2-02 @ One Precinct (1337) Lengkok Mayang Pasir, 11900 Bayan Baru, Penang.
Kuala Lumpur 221, Block A, Kelana Center Point, Jalan SS7/19, 47301 Petaling Jaya, Selangor
info@dtsys.sg / info@dtsys.ny

Finally, after going through all the steps and completing all the examples, check **Healing1.Z3** using the **Show Open** feature under Heal ribbon tab.

Final result: All broken edges healed. There is no open edge.

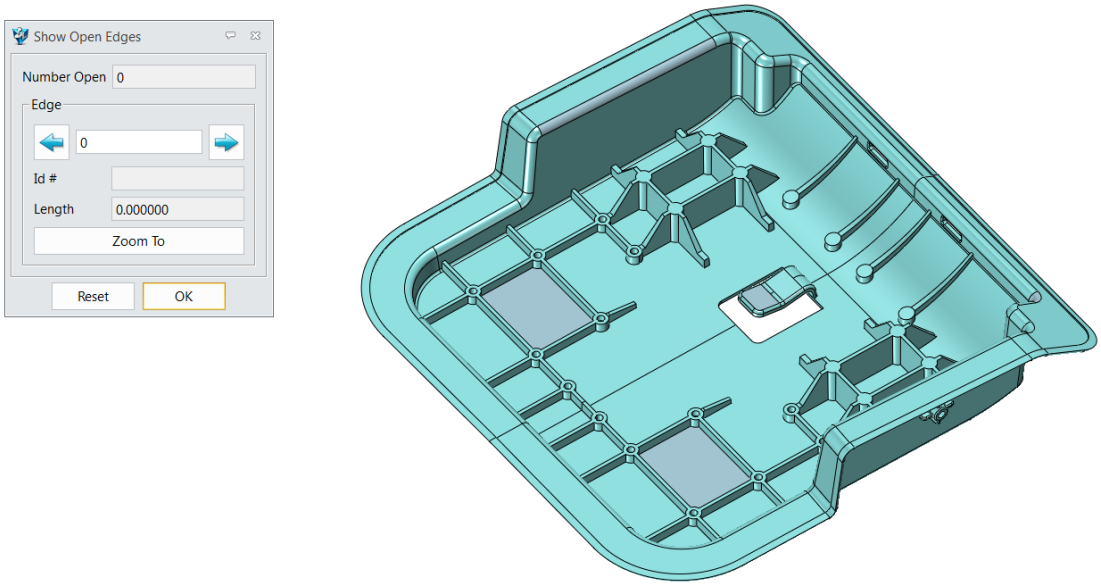

Figure 287: Final result

Note:

If the number of open surfaces is **not** zero, check if sewing is done on the broken edges.

© Dream Technology System 2018
DTS Group Training Centres Location:
Singapore 2, Kallang Avenue #08-18 CT Hub, Singapore 339407
Johor Bahru Unit 07-04, Austin18, Jalan Austin Perdana 3, Taman Austin Perdana, 81100 Johor Bahru, Johor
Penang 1A-2-02 @ One Precinct (1337) Lengkok Mayang Pasir, 11900 Bayan Baru, Penang.
Kuala Lumpur 221, Block A, Kelana Center Point, Jalan SS7/19, 47301 Petaling Jaya, Selangor
info@dtsys.sg / info@dtsys.ny

Training Resources

Full set training material is available under Help icon as shown below.

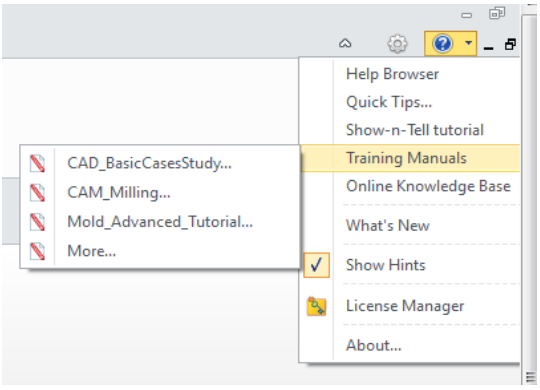

Figure 288: Training Materials in ZW3D

Alternatively, you can always visit

http://www.zwsoft.com/Service_Support/ser_zw3d/Tricks/

Or access the ZWSoft YouTube Channel

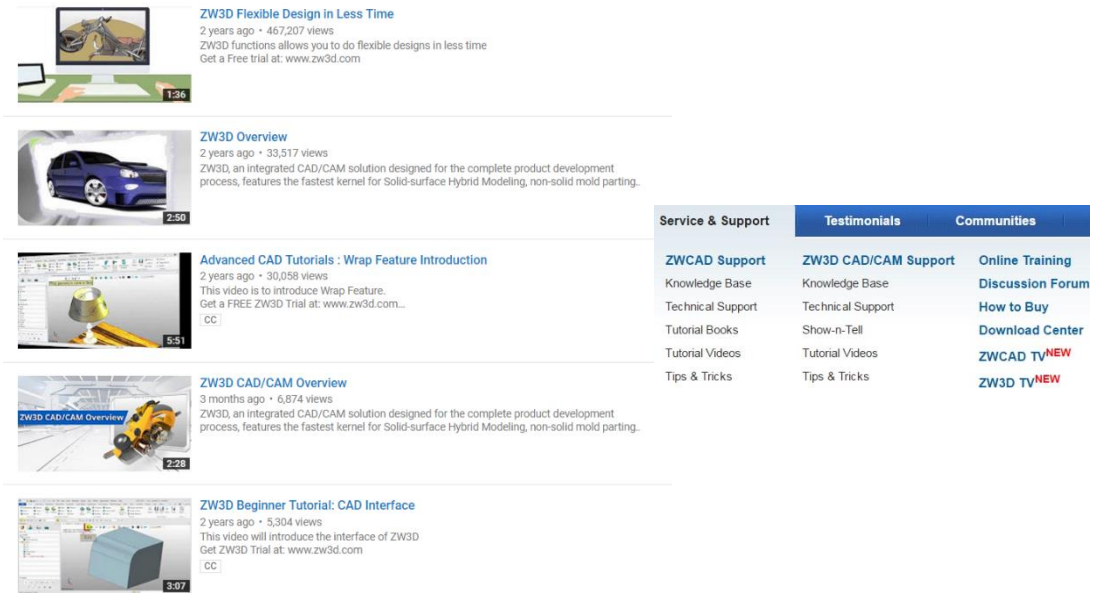

Figure 289: Left: ZW3D YouTube Channel, Right: ZW3D Online Support

© Dream Technology System 2018
DTS Group Training Centres Location:
Singapore 2, Kallang Avenue #08-18 CT Hub, Singapore 339407
Johor Bahru Unit 07-04, Austin18, Jalan Austin Perdana 3, Taman Austin Perdana, 81100 Johor Bahru, Johor
Penang 1A-2-02 @ One Precinct (1337) Lengkok Mayang Pasir, 11900 Bayan Baru, Penang.
Kuala Lumpur 221, Block A, Kelana Center Point, Jalan SS7/19, 47301 Petaling Jaya, Selangor
info@dtsys.sg / info@dtsys.ny

Practice Project

Practice Project 1

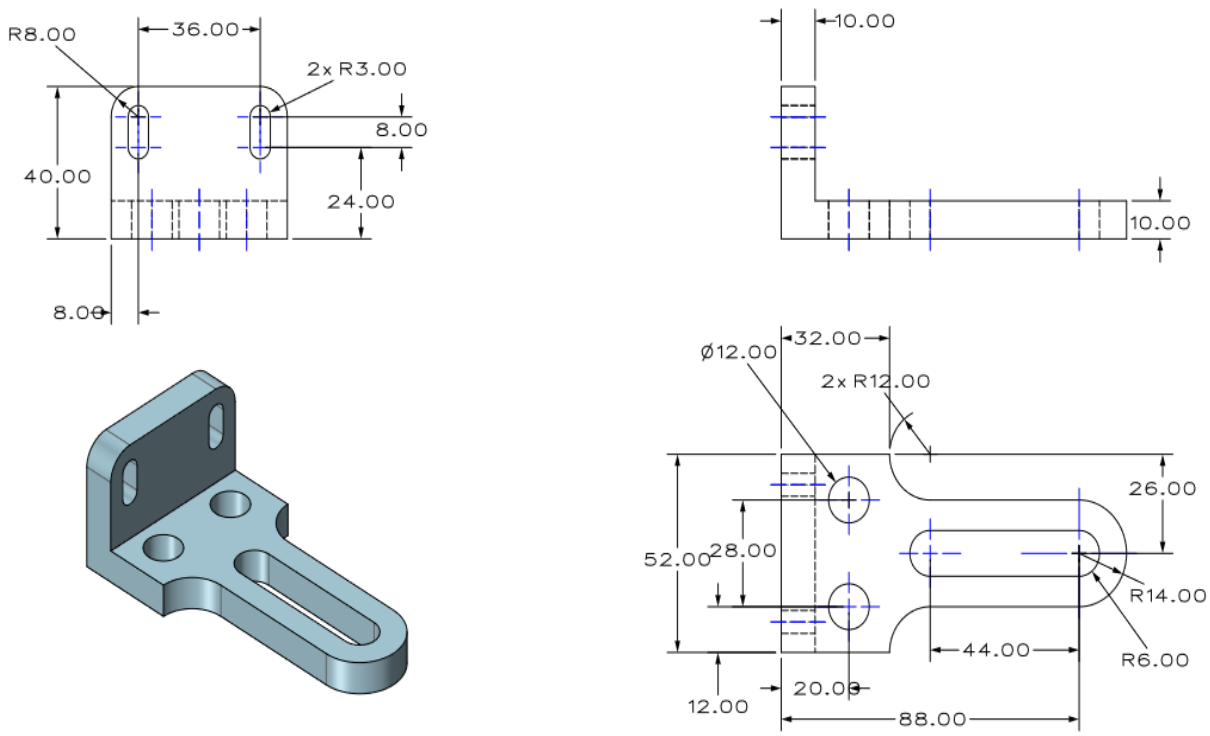

Figure 290: Practice Project 1

© Dream Technology System 2018
DTS Group Training Centres Location:
Singapore 2, Kallang Avenue #08-18 CT Hub, Singapore 339407
Johor Bahru Unit 07-04, Austin18, Jalan Austin Perdana 3, Taman Austin Perdana, 81100 Johor Bahru, Johor
Penang 1A-2-02 @ One Precinct (1337) Lengkok Mayang Pasir, 11900 Bayan Baru, Penang.
Kuala Lumpur 221, Block A, Kelana Center Point, Jalan SS7/19, 47301 Petaling Jaya, Selangor
info@dtsys.sg / info@dtsys.ny

Practice Project 2

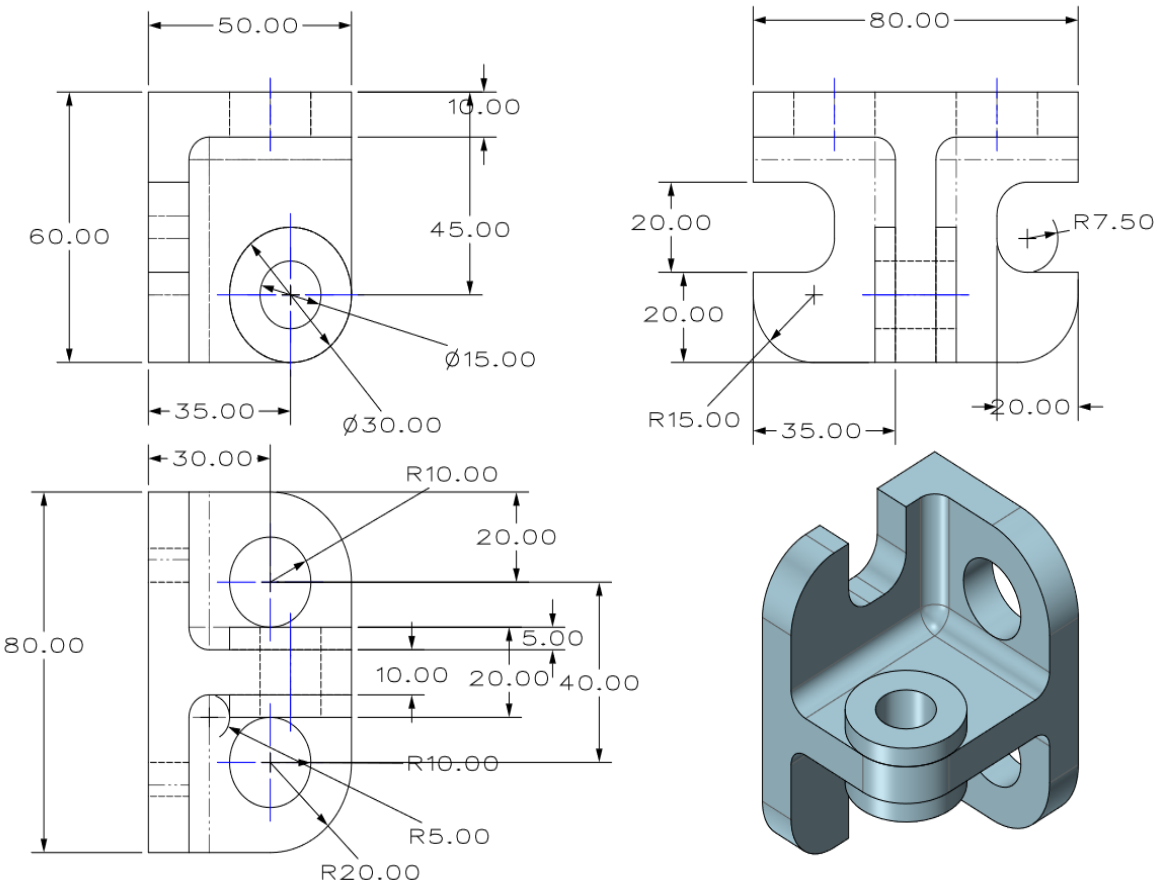

Figure 291: Practice Project 2

© Dream Technology System 2018
DTS Group Training Centres Location:
Singapore 2, Kallang Avenue #08-18 CT Hub, Singapore 339407
Johor Bahru Unit 07-04, Austin18, Jalan Austin Perdana 3, Taman Austin Perdana, 81100 Johor Bahru, Johor
Penang 1A-2-02 @ One Precinct (1337) Lengkok Mayang Pasir, 11900 Bayan Baru, Penang.
Kuala Lumpur 221, Block A, Kelana Center Point, Jalan SS7/19, 47301 Petaling Jaya, Selangor
info@dtsys.sg / info@dtsys.ny

Practice Project 3

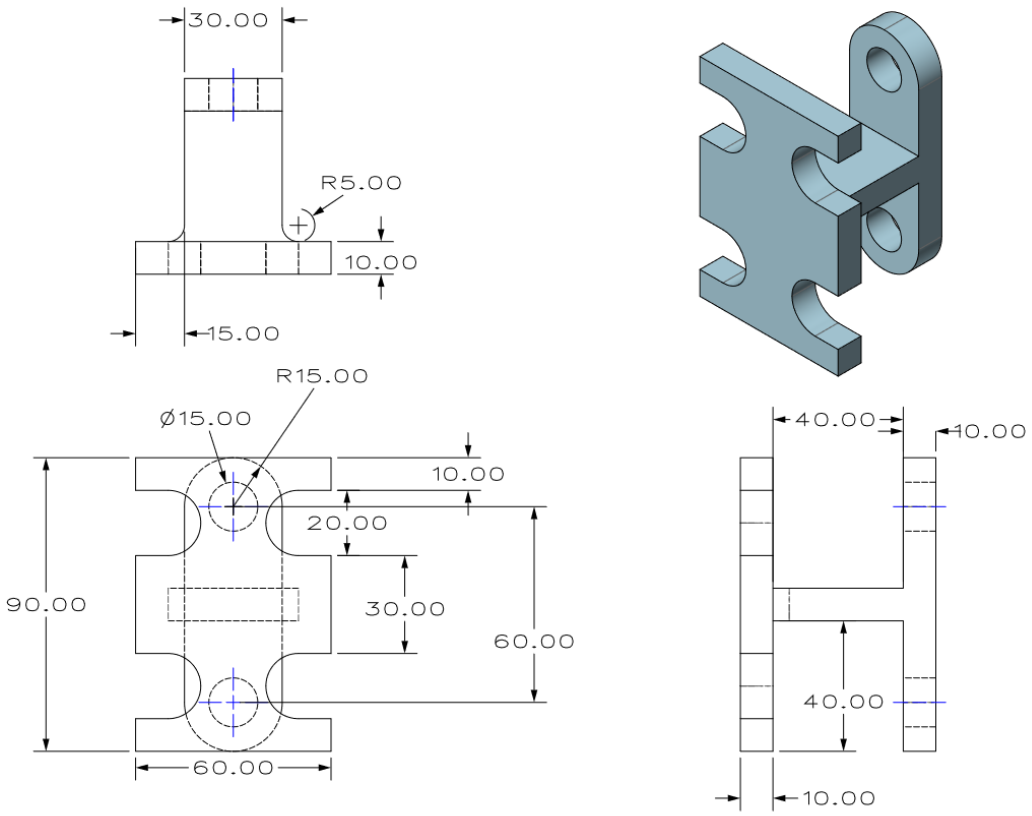

Figure 292: Practice Project 3

© Dream Technology System 2018
DTS Group Training Centres Location:
Singapore 2, Kallang Avenue #08-18 CT Hub, Singapore 339407
Johor Bahru Unit 07-04, Austin18, Jalan Austin Perdana 3, Taman Austin Perdana, 81100 Johor Bahru, Johor
Penang 1A-2-02 @ One Precinct (1337) Lengkok Mayang Pasir, 11900 Bayan Baru, Penang.
Kuala Lumpur 221, Block A, Kelana Center Point, Jalan SS7/19, 47301 Petaling Jaya, Selangor
info@dtsys.sg / info@dtsys.ny

Practice Project 4

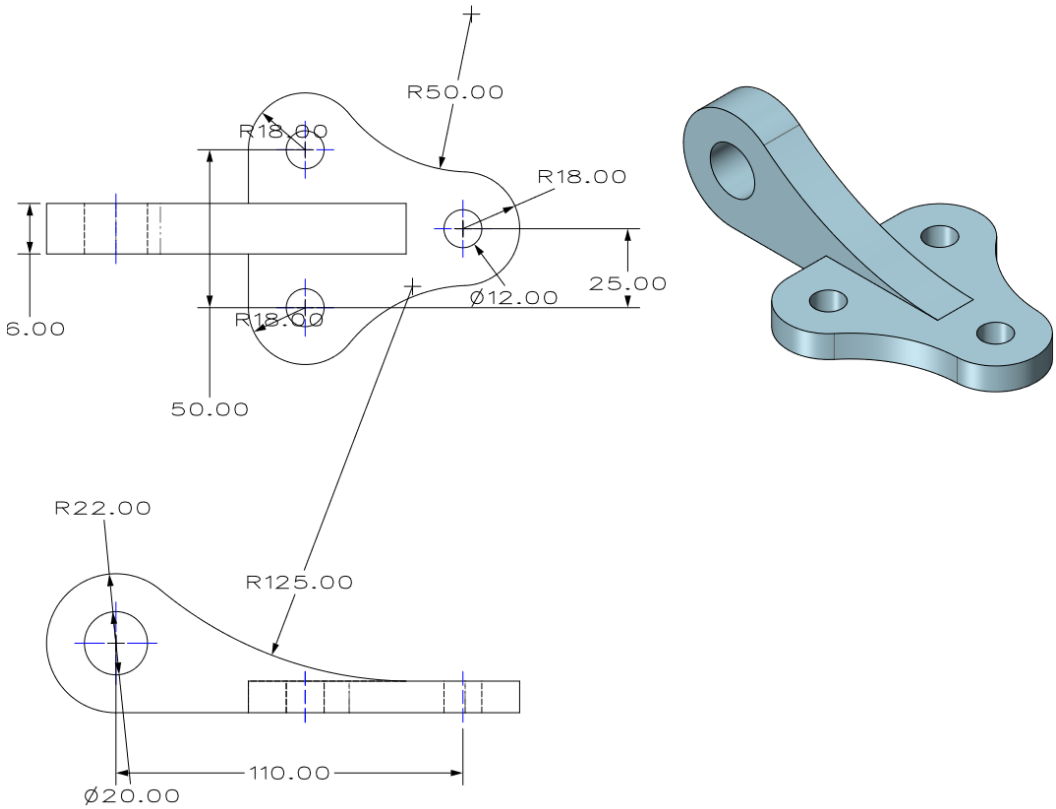

Figure 293: Practice Project 4

© Dream Technology System 2018
DTS Group Training Centres Location:
Singapore 2, Kallang Avenue #08-18 CT Hub, Singapore 339407
Johor Bahru Unit 07-04, Austin18, Jalan Austin Perdana 3, Taman Austin Perdana, 81100 Johor Bahru, Johor
Penang 1A-2-02 @ One Precinct (1337) Lengkok Mayang Pasir, 11900 Bayan Baru, Penang.
Kuala Lumpur 221, Block A, Kelana Center Point, Jalan SS7/19, 47301 Petaling Jaya, Selangor
info@dtsys.sg / info@dtsys.ny

Practice Project 5

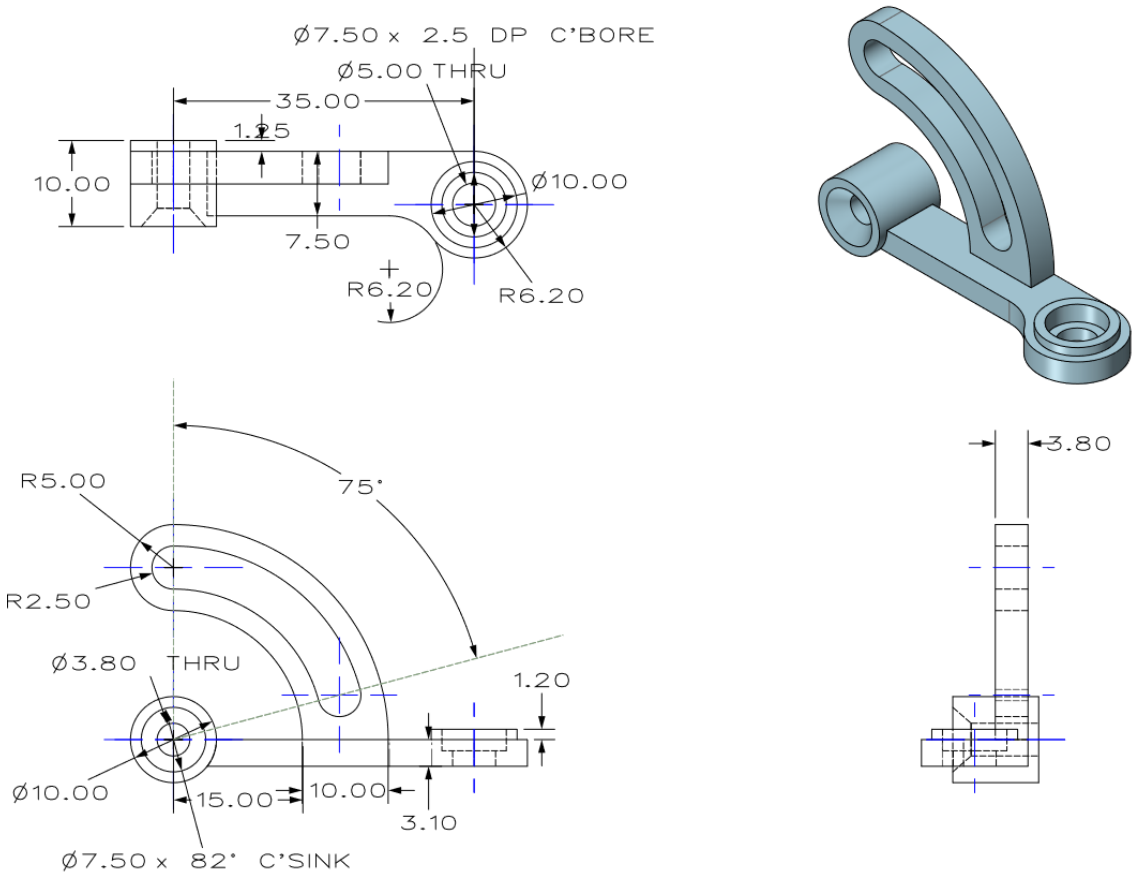

Figure 294: Practice Project 5

© Dream Technology System 2018
DTS Group Training Centres Location:
Singapore 2, Kallang Avenue #08-18 CT Hub, Singapore 339407
Johor Bahru Unit 07-04, Austin18, Jalan Austin Perdana 3, Taman Austin Perdana, 81100 Johor Bahru, Johor
Penang 1A-2-02 @ One Precinct (1337) Lengkok Mayang Pasir, 11900 Bayan Baru, Penang.
Kuala Lumpur 221, Block A, Kelana Center Point, Jalan SS7/19, 47301 Petaling Jaya, Selangor
info@dtsys.sg / info@dtsys.ny

Practice Project 6

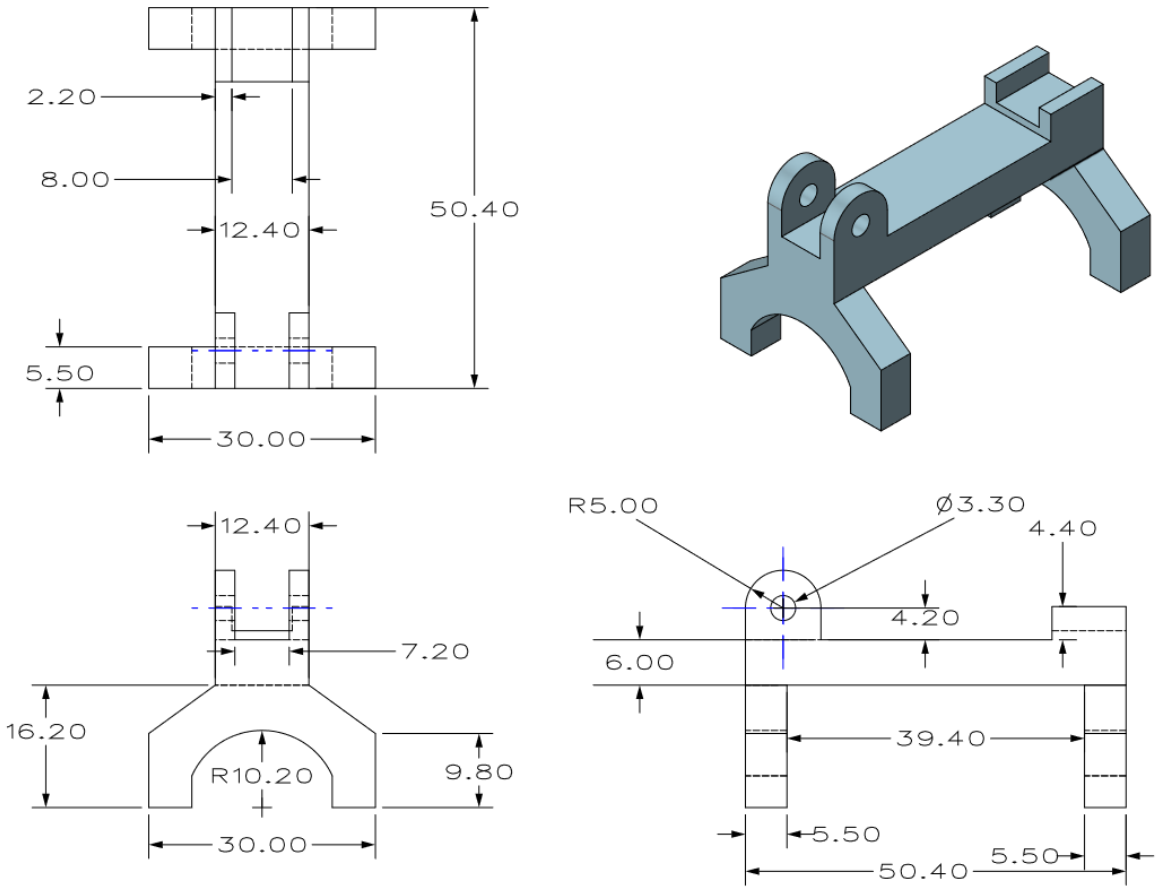

Figure 295: Practice Project 6

© Dream Technology System 2018
DTS Group Training Centres Location:
Singapore 2, Kallang Avenue #08-18 CT Hub, Singapore 339407
Johor Bahru Unit 07-04, Austin18, Jalan Austin Perdana 3, Taman Austin Perdana, 81100 Johor Bahru, Johor
Penang 1A-2-02 @ One Precinct (1337) Lengkok Mayang Pasir, 11900 Bayan Baru, Penang.
Kuala Lumpur 221, Block A, Kelana Center Point, Jalan SS7/19, 47301 Petaling Jaya, Selangor
info@dtsys.sg / info@dtsys.ny

Practice Project 7

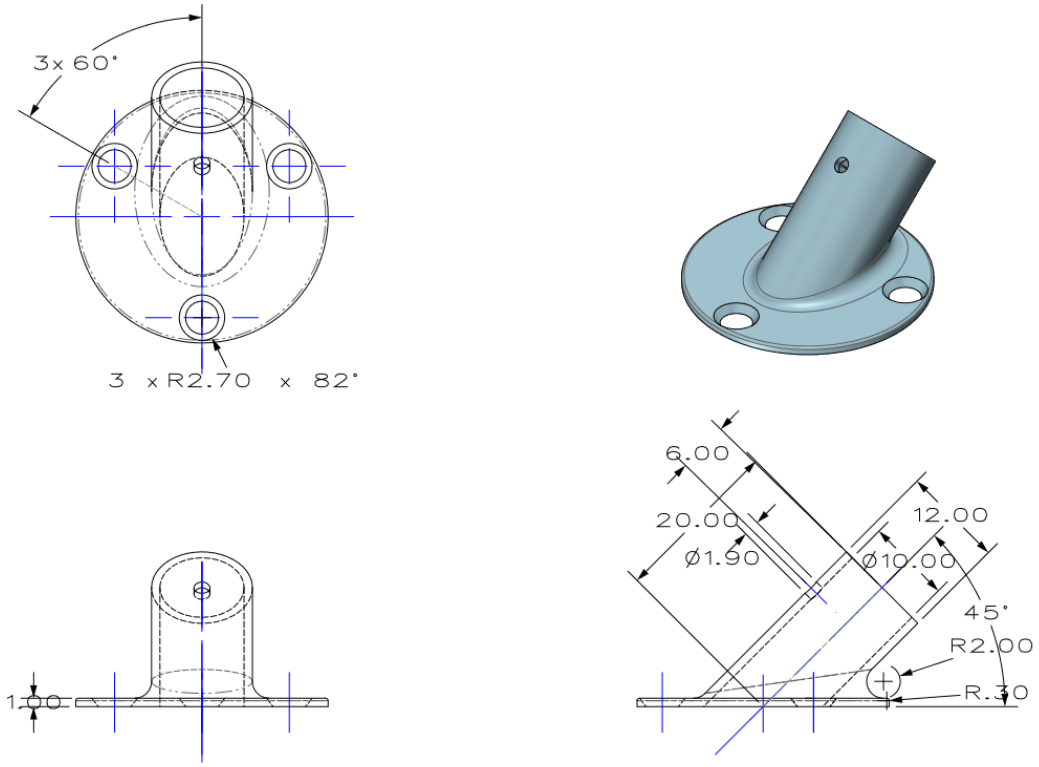

Figure 296: Practice Project 7

© Dream Technology System 2018
DTS Group Training Centres Location:
Singapore 2, Kallang Avenue #08-18 CT Hub, Singapore 339407
Johor Bahru Unit 07-04, Austin18, Jalan Austin Perdana 3, Taman Austin Perdana, 81100 Johor Bahru, Johor
Penang 1A-2-02 @ One Precinct (1337) Lengkok Mayang Pasir, 11900 Bayan Baru, Penang.
Kuala Lumpur 221, Block A, Kelana Center Point, Jalan SS7/19, 47301 Petaling Jaya, Selangor
info@dtsys.sg / info@dtsys.ny

Practice Project 8

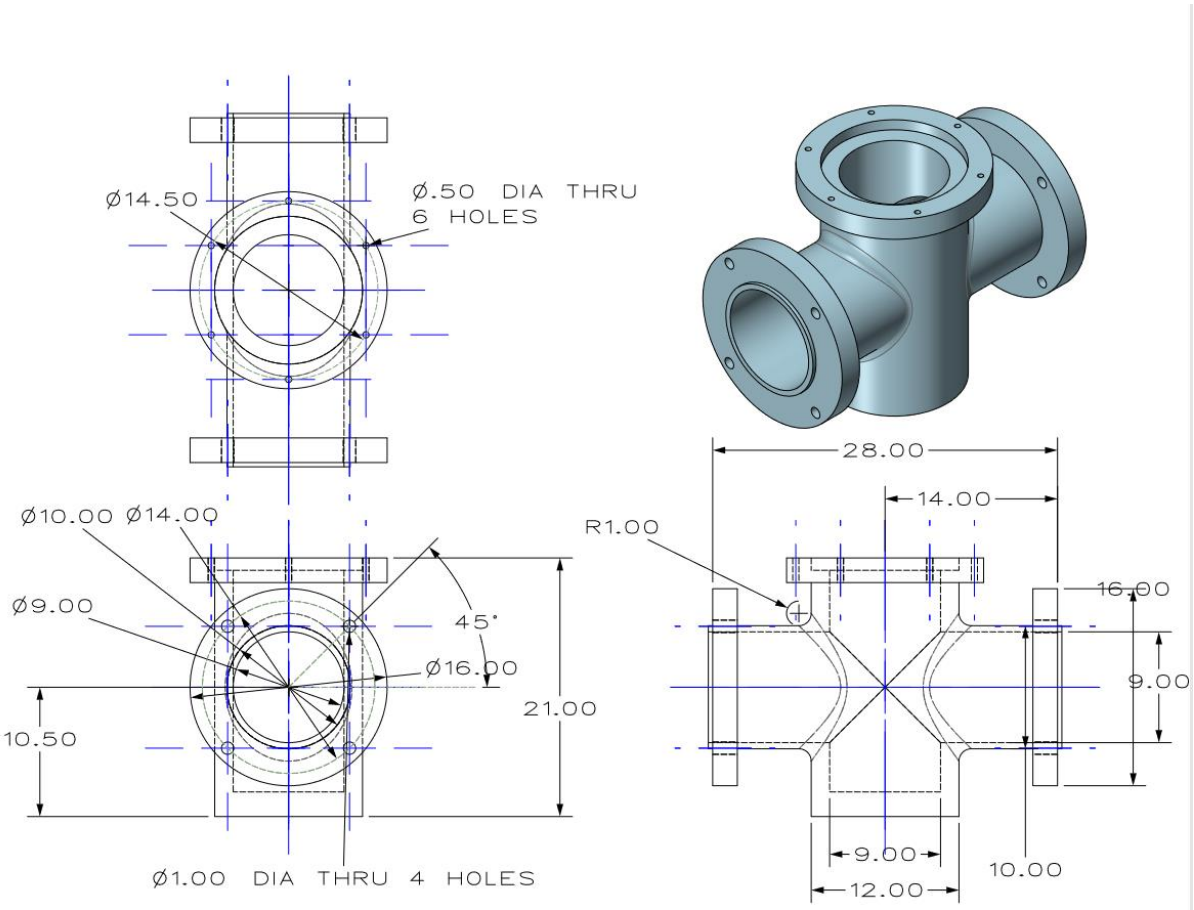

Figure 297: Practice Project 8

© Dream Technology System 2018
DTS Group Training Centres Location:
Singapore 2, Kallang Avenue #08-18 CT Hub, Singapore 339407
Johor Bahru Unit 07-04, Austin18, Jalan Austin Perdana 3, Taman Austin Perdana, 81100 Johor Bahru, Johor
Penang 1A-2-02 @ One Precinct (1337) Lengkok Mayang Pasir, 11900 Bayan Baru, Penang.
Kuala Lumpur 221, Block A, Kelana Center Point, Jalan SS7/19, 47301 Petaling Jaya, Selangor
info@dtsys.sg / info@dtsys.ny

Practice Project 9

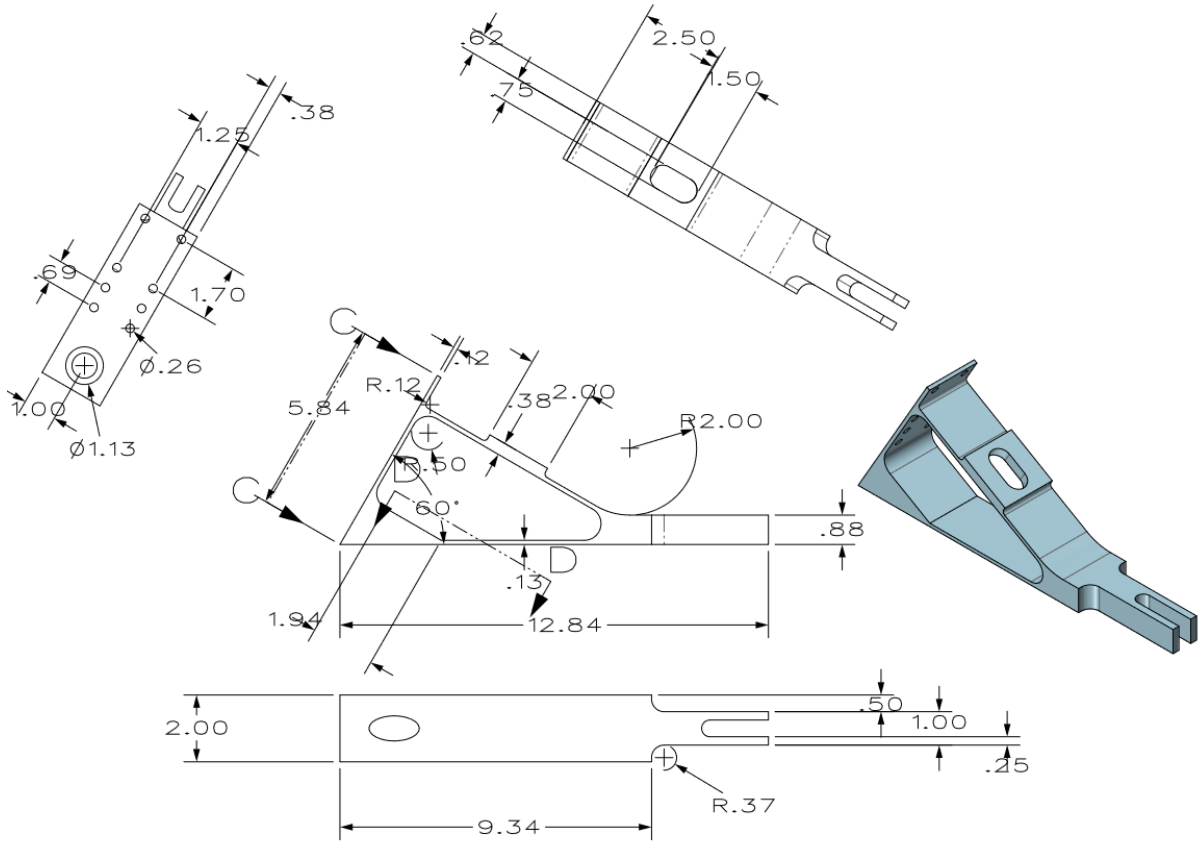

Figure 298: Practice Project 9

© Dream Technology System 2018
DTS Group Training Centres Location:
Singapore 2, Kallang Avenue #08-18 CT Hub, Singapore 339407
Johor Bahru Unit 07-04, Austin18, Jalan Austin Perdana 3, Taman Austin Perdana, 81100 Johor Bahru, Johor
Penang 1A-2-02 @ One Precinct (1337) Lengkok Mayang Pasir, 11900 Bayan Baru, Penang.
Kuala Lumpur 221, Block A, Kelana Center Point, Jalan SS7/19, 47301 Petaling Jaya, Selangor
info@dtsys.sg / info@dtsys.ny

Practice Project 10

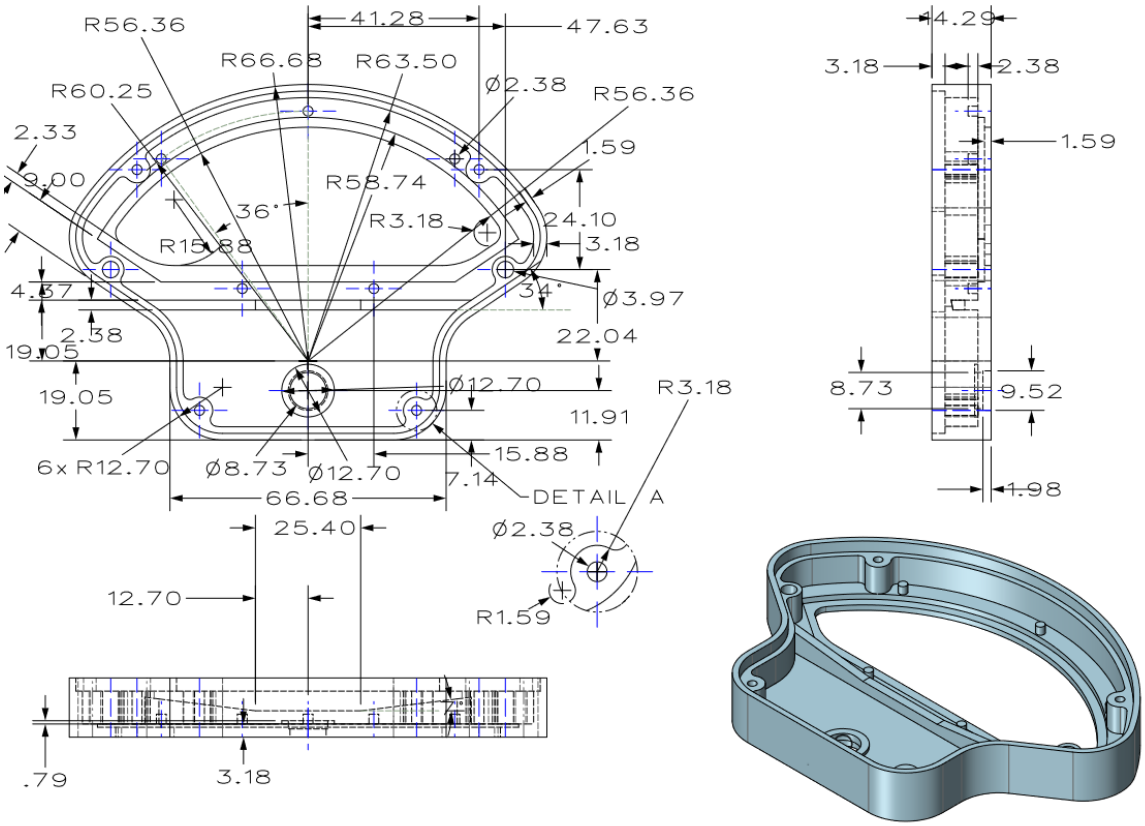

Figure 299: Practice Project 10

© Dream Technology System 2018
DTS Group Training Centres Location:
Singapore 2, Kallang Avenue #08-18 CT Hub, Singapore 339407
Johor Bahru Unit 07-04, Austin18, Jalan Austin Perdana 3, Taman Austin Perdana, 81100 Johor Bahru, Johor
Penang 1A-2-02 @ One Precinct (1337) Lengkok Mayang Pasir, 11900 Bayan Baru, Penang.
Kuala Lumpur 221, Block A, Kelana Center Point, Jalan SS7/19, 47301 Petaling Jaya, Selangor
info@dtsys.sg / info@dtsys.ny

Thank You

© Dream Technology System 2018
DTS Group Training Centres Location:
Singapore 2, Kallang Avenue #08-18 CT Hub, Singapore 339407
Johor Bahru Unit 07-04, Austin18, Jalan Austin Perdana 3, Taman Austin Perdana, 81100 Johor Bahru, Johor
Penang 1A-2-02 @ One Precinct (1337) Lengkok Mayang Pasir, 11900 Bayan Baru, Penang.
Kuala Lumpur 221, Block A, Kelana Center Point, Jalan SS7/19, 47301 Petaling Jaya, Selangor
info@dtsys.sg / info@dtsys.ny